TDK

May 2013

Inductors for Standard Circuits

Wound Ferrite

NL series

NL453232	**4532 [1812 inch]***
NL565050	**5650 [2220 inch]**

*** Dimensions Code JIS[EIA]**

REMINDERS FOR USING THESE PRODUCTS

Before using these products, be sure to request the delivery specifications.

SAFETY REMINDERS

Please pay sufficient attention to the warnings for safe designing when using these products.

⚠ REMINDERS

- The storage period is less than 6 months. Be sure to follow the storage conditions (Temperature: 5 to 40°C, Humidity: 10 to 75% RH or less).
  If the storage period elapses, the soldering of the terminal electrodes may deteriorate.
- Do not use or store in locations where there are conditions such as gas corrosion (salt, acid, alkali, etc.).
- Before soldering, be sure to preheat components.
  The preheating temperature should be set so that the temperature difference between the solder temperature and chip temperature does not exceed 150°C.
- Soldering corrections after mounting should be within the range of the conditions determined in the specifications.
  If overheated, a short circuit, performance deterioration, or lifespan shortening may occur.
- When embedding a printed circuit board where a chip is mounted to a set, be sure that residual stress is not given to the chip due to the overall distortion of the printed circuit board and partial distortion such as at screw tightening portions.
- Self heating (temperature increase) occurs when the power is turned ON, so the tolerance should be sufficient for the set thermal design.
- Carefully lay out the coil for the circuit board design of the non-magnetic shield type.
  A malfunction may occur due to magnetic interference.
- Use a wrist band to discharge static electricity in your body through the grounding wire.
- Do not expose the products to magnets or magnetic fields.
- Do not use for a purpose outside of the contents regulated in the delivery specifications.
- The products listed on this catalog are intended for use in general electronic equipment (AV equipment, telecommunications equipment, home appliances, amusement equipment, computer equipment, personal equipment, office equipment, measurement equipment, industrial robots) under a normal operation and use condition.
  The products are not designed or warranted to meet the requirements of the applications listed below, whose performance and/or quality require a more stringent level of safety or reliability, or whose failure, malfunction or trouble could cause serious damage to society, person or property.
  If you intend to use the products in the applications listed below or if you have special requirements exceeding the range or conditions set forth in the each catalog, please contact us.

(1) Aerospace/Aviation equipment
(2) Transportation equipment (cars, electric trains, ships, etc.)
(3) Medical equipment
(4) Power-generation control equipment
(5) Atomic energy-related equipment
(6) Seabed equipment
(7) Transportation control equipment
(8) Public information-processing equipment
(9) Military equipment
(10) Electric heating apparatus, burning equipment
(11) Disaster prevention/crime prevention equipment
(12) Safety equipment
(13) Other applications that are not considered general-purpose applications

When designing your equipment even for general-purpose applications, you are kindly requested to take into consideration securing protection circuit/device or providing backup circuits in your equipment.

Inductors for Standard Circuits

Wound Ferrite

Product compatible with RoHS directive
Compatible with lead-free solders

Overview of the NL Series



FEATURES

- Resin mold type wound inductor for standard circuits.
- 1 to 10000μH, E-12 Series, wide lineup compatible with J (±5%) tolerance, can be used for applications that need to meet strict L tolerance such as filter circuits.
- Has excellent inductance temperature characteristics in the operating temperature range.

APPLICATION

Smart meters, AV equipment, xDSL, electronic devices for communications infrastructure such as mobile base stations, industrial equipment, other

PART NUMBER CONSTRUCTION

NL | 453232 | T | - | 1R0 | J | - | PF

Series name	L×W×H Dimensions (mm)		Packaging style		Inductance (μH)		Inductance tolerance		Internal code
	453232	4.5×3.2×3.2	T	Taping	1R0	1	J	±5%	
	565050	5.6×5.0×5.0			100	10			
					101	100			
					102	1000			
					103	10000			

OPERATING TEMPERATURE RANGE, PACKAGE QUANTITY, PRODUCT WEIGHT

Type	Temperature range		Package quantity	Individual weight
	Operating temperature*	Storage temperature**		
	(°C)	(°C)	(pieces/reel)	(mg)
NL453232	–40 to +105	–40 to +105	500	180
NL565050	–40 to +105	–40 to +105	400	380

* Operating temperature range includes self-temperature rise.
** The Storage temperature range is for after the circuit board is mounted.

RoHS Directive Compliant Product: See the following for more details related to RoHS Directive compliant products. http://www.tdk.co.jp/rohs/

• All specifications are subject to change without notice.

Overview of the NL Series

RECOMMENDED REFLOW PROFILE

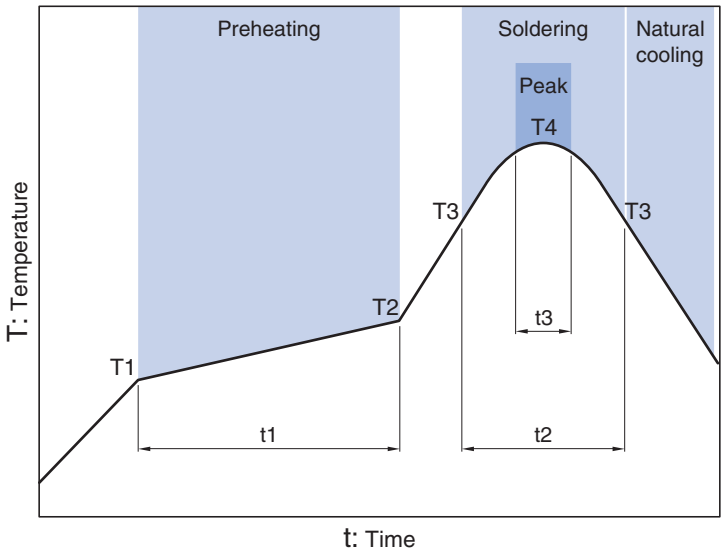

Preheating			Soldering		Peak	
Temp.		Time	Temp.	Time	Temp.	Time
T1	T2	t1	T3	t2	T4	t3
150°C	180°C	90 to 120s	230°C	40s	255°C	10s max.

NL series

NL453232 Type

SHAPE & DIMENSIONS

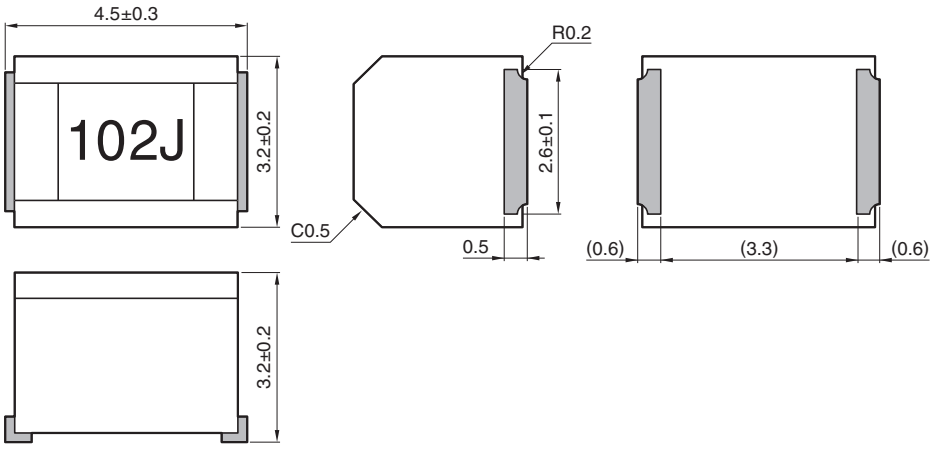

Dimensions in mm

RECOMMENDED LAND PATTERN

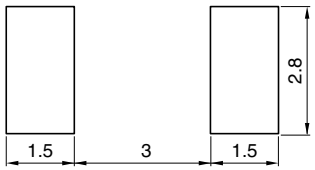

Dimensions in mm

NL series NL453232 Type

■ELECTRICAL CHARACTERISTICS

□CHARACTERISTICS SPECIFICATION TABLE

L (μH)	Tolerance	Q min.	L, Q measuring frequency (MHz)	Self-resonant frequency (MHz) min.	DC resistance (Ω) max.	Rated current* (mA) max.	Part No.
1	±5%	50	7.96	100	0.5	450	NL453232T-1R0J-PF
1.2	±5%	50	7.96	80	0.55	430	NL453232T-1R2J-PF
1.5	±5%	50	7.96	70	0.6	410	NL453232T-1R5J-PF
1.8	±5%	50	7.96	60	0.65	390	NL453232T-1R8J-PF
2.2	±5%	50	7.96	55	0.7	380	NL453232T-2R2J-PF
2.7	±5%	50	7.96	50	0.75	370	NL453232T-2R7J-PF
3.3	±5%	50	7.96	45	0.8	355	NL453232T-3R3J-PF
3.9	±5%	50	7.96	40	0.9	330	NL453232T-3R9J-PF
4.7	±5%	50	7.96	35	1	315	NL453232T-4R7J-PF
5.6	±5%	50	7.96	33	1.1	300	NL453232T-5R6J-PF
6.8	±5%	50	7.96	27	1.2	285	NL453232T-6R8J-PF
8.2	±5%	50	7.96	25	1.4	270	NL453232T-8R2J-PF
10	±5%	50	2.52	20	1.6	250	NL453232T-100J-PF
12	±5%	50	2.52	18	2	225	NL453232T-120J-PF
15	±5%	50	2.52	17	2.5	200	NL453232T-150J-PF
18	±5%	50	2.52	15	2.8	190	NL453232T-180J-PF
22	±5%	50	2.52	13	3.2	180	NL453232T-220J-PF
27	±5%	50	2.52	12	3.6	170	NL453232T-270J-PF
33	±5%	50	2.52	11	4	160	NL453232T-330J-PF
39	±5%	50	2.52	10	4.5	150	NL453232T-390J-PF
47	±5%	50	2.52	10	5	140	NL453232T-470J-PF
56	±5%	50	2.52	9	5.5	135	NL453232T-560J-PF
68	±5%	50	2.52	9	6	130	NL453232T-680J-PF
82	±5%	50	2.52	8	7	120	NL453232T-820J-PF
100	±5%	40	0.796	8	8	110	NL453232T-101J-PF
120	±5%	40	0.796	6	8	110	NL453232T-121J-PF
150	±5%	40	0.796	5	9	105	NL453232T-151J-PF
180	±5%	40	0.796	5	9.5	102	NL453232T-181J-PF
220	±5%	40	0.796	4	10	100	NL453232T-221J-PF
270	±5%	40	0.796	4	12	92	NL453232T-271J-PF
330	±5%	40	0.796	3.5	14	85	NL453232T-331J-PF
390	±5%	40	0.796	3	16	80	NL453232T-391J-PF
470	±5%	40	0.796	3	26	62	NL453232T-471J-PF
560	±5%	30	0.796	3	30	50	NL453232T-561J-PF
680	±5%	30	0.796	3	30	50	NL453232T-681J-PF
820	±5%	30	0.796	2.5	35	30	NL453232T-821J-PF
1000	±5%	30	0.252	2.5	40	30	NL453232T-102J-PF

* Rated current: smaller value of either Idc1 or Idc2.
Idc1: When based on the inductance change rate (10% below the initial value)
Idc2: When based on the temperature increase (Temperature increase of 20°C by self heating)

○ Measurement equipment

Measurement item	Product No.	Manufacturer
L, Q	4194A	Agilent Technologies
Self-resonant frequency	8753C	Agilent Technologies
DC resistance	VP-2941A	Panasonic

＊ Equivalent measurement equipment may be used.

NL series NL453232 Type

■ELECTRICAL CHARACTERISTICS

□L FREQUENCY CHARACTERISTICS GRAPH

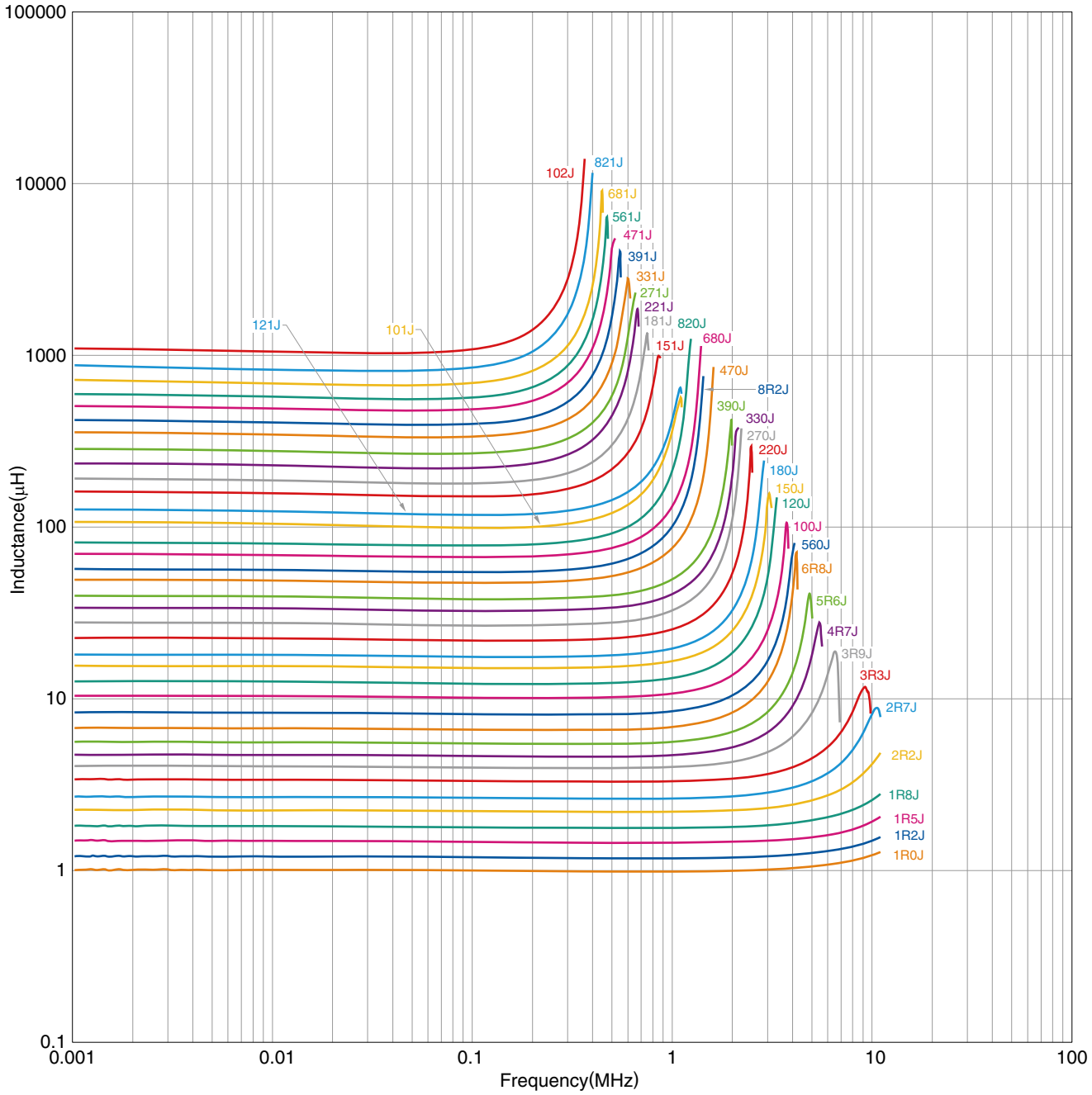

○ Measurement equipment

Product No.	Manufacturer
4294A	Agilent Technologies

＊ Equivalent measurement equipment may be used.

NL series NL453232 Type

■ELECTRICAL CHARACTERISTICS

□Q FREQUENCY CHARACTERISTICS GRAPH

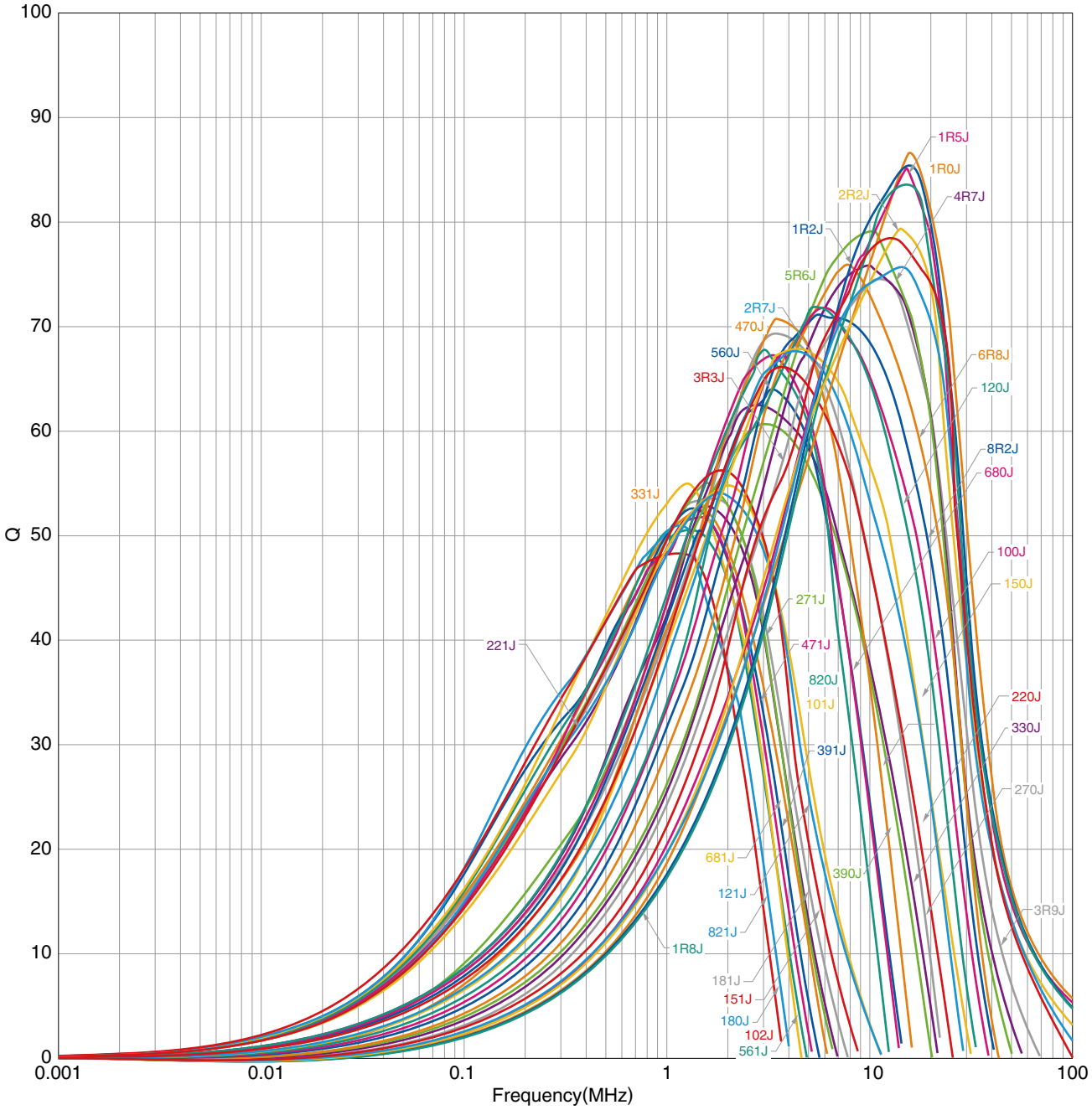

○ Measurement equipment

Product No.	Manufacturer
4294A	Agilent Technologies

＊ Equivalent measurement equipment may be used.

NL series

NL565050 Type

SHAPE & DIMENSIONS

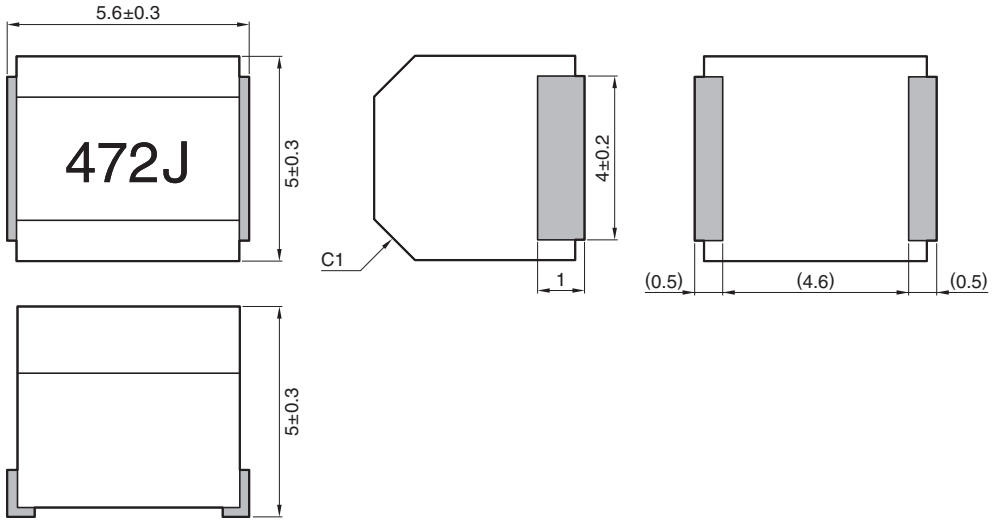

Dimensions in mm

RECOMMENDED LAND PATTERN

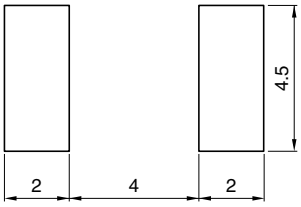

Dimensions in mm

NL series NL565050 Type

■ELECTRICAL CHARACTERISTICS

□CHARACTERISTICS SPECIFICATION TABLE

L (mH)	tolerance	Q min.	L, Q measuring frequency (MHz)	Self-resonant frequency (MHz) min.	DC resistance (Ω) max.	Rated current* (mA) max.	Part No.
1.2	±5%	30	0.252	1.5	17	75	NL565050T-122J-PF
1.5	±5%	30	0.252	1.4	20	70	NL565050T-152J-PF
1.8	±5%	30	0.252	1.3	30	60	NL565050T-182J-PF
2.2	±5%	30	0.252	1.2	35	55	NL565050T-222J-PF
2.7	±5%	30	0.252	1.1	55	45	NL565050T-272J-PF
3.3	±5%	30	0.252	1	60	40	NL565050T-332J-PF
3.9	±5%	30	0.252	1	70	38	NL565050T-392J-PF
4.7	±5%	30	0.252	0.9	78	36	NL565050T-472J-PF
5.6	±5%	30	0.252	0.8	85	33	NL565050T-562J-PF
6.8	±5%	30	0.252	0.7	110	30	NL565050T-682J-PF
8.2	±5%	30	0.252	0.6	125	28	NL565050T-822J-PF
10	±5%	20	0.0796	0.5	150	25	NL565050T-103J-PF

* Rated current: smaller value of either Idc1 or Idc2.
Idc1: When based on the inductance change rate (10% below the initial value)
Idc2: When based on the temperature increase (Temperature increase of 20°C by self heating)

○ Measurement equipment

Measurement item	Product No.	Manufacturer
L, Q	4194A	Agilent Technologies
Self-resonant frequency	8753C	Agilent Technologies
DC resistance	VP-2941A	Panasonic

＊ Equivalent measurement equipment may be used.

NL series NL565050Type

■ELECTRICAL CHARACTERISTICS

□L FREQUENCY CHARACTERISTICS GRAPH

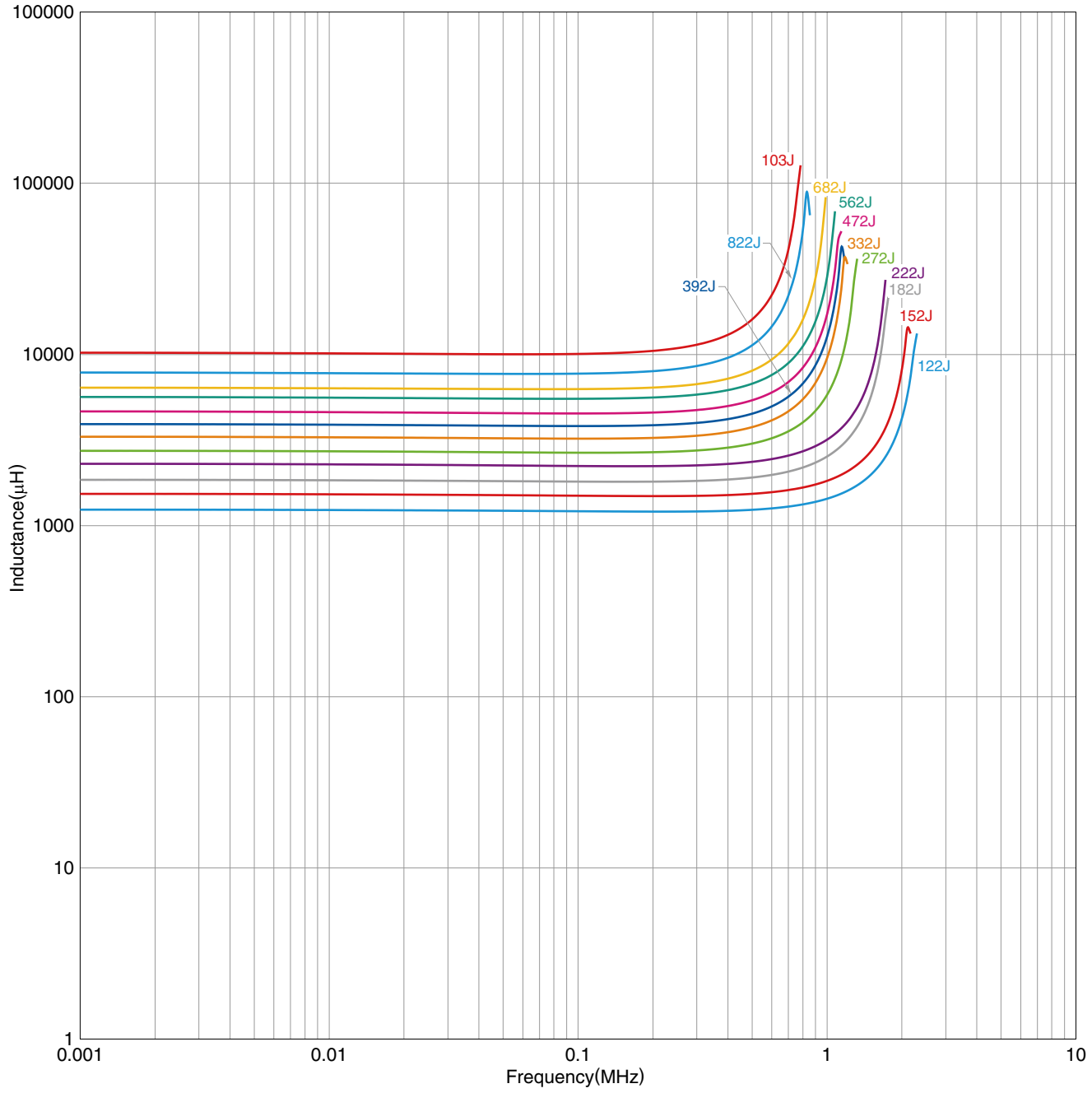

○ Measurement equipment

Product No.	Manufacturer
4294A	Agilent Technologies

＊ Equivalent measurement equipment may be used.

NL series NL565050 Type

■ELECTRICAL CHARACTERISTICS

□Q FREQUENCY CHARACTERISTICS GRAPH

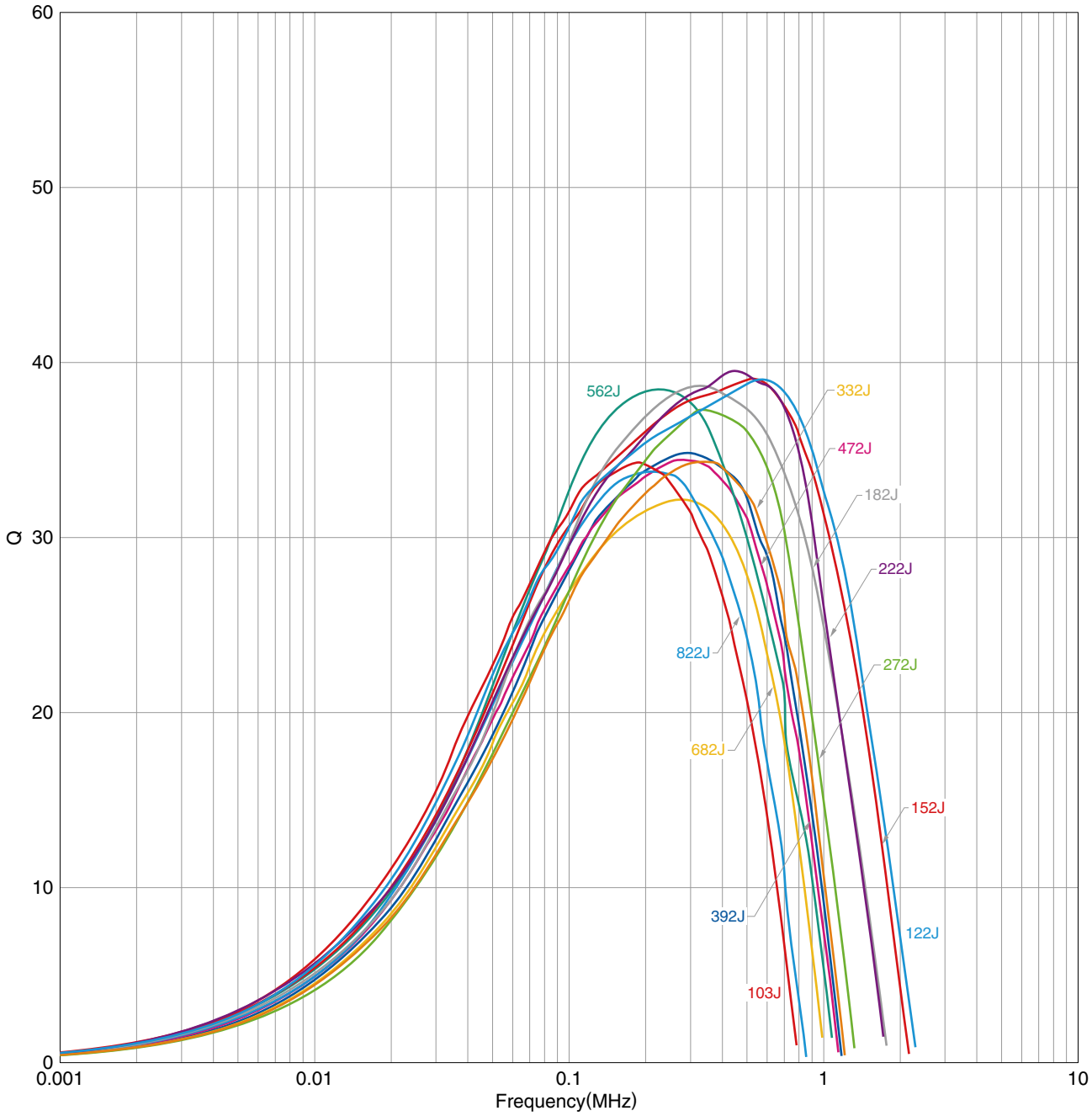

○ Measurement equipment

Product No.	Manufacturer
4294A	Agilent Technologies

＊ Equivalent measurement equipment may be used.

NL series

Packaging Style

REEL DIMENSIONS

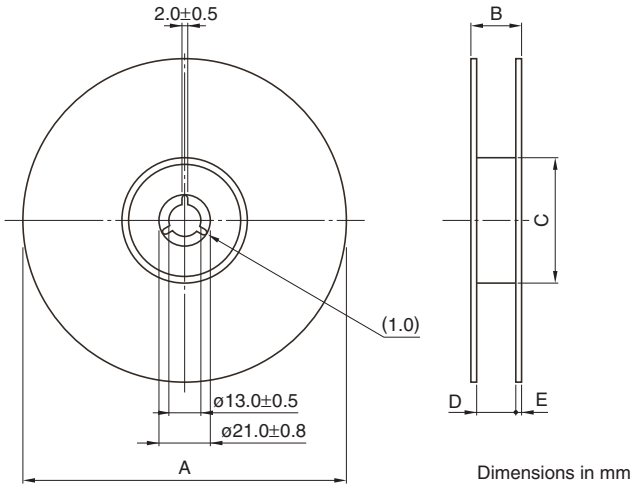

Dimensions in mm

Type	A	B	C	D	E
NL453232	ø180	17	ø60	13	0.5
NL565050	ø180	17	ø60	13	0.5

* These values are typical values.

TAPE DIMENSIONS

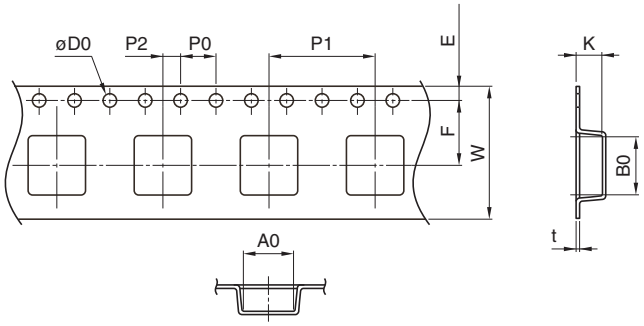

Dimensions in mm

Type	A0	B0	øD0	E	F	P0	P1	P2	W	K	t
NL453232	3.6	4.9	1.5+0.1/-0	1.75±0.1	5.50±0.05	4.00±0.10	8.00±0.10	2.00±0.05	12.0±0.30	3.2	0.4
NL565050	5.4	5.8	1.5+0.1/-0	1.75±0.1	5.50±0.05	4.00±0.10	8.00±0.10	2.00±0.05	12.0±0.30	5.4	0.4