Metal Alloy Low-Resistance Resistor

● LR Series

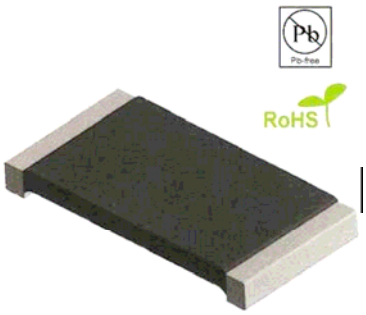

■ Construction

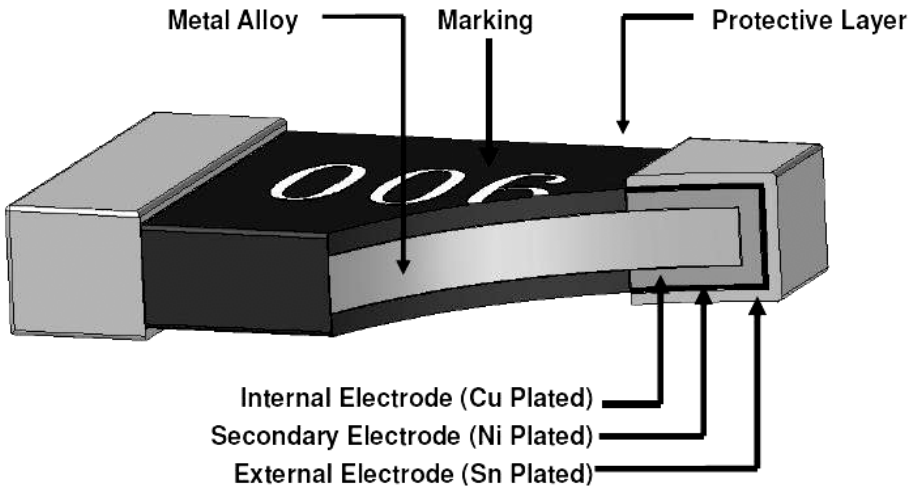

■ Application

- Power supply
- Battery pack
- DIY tools
- Inverter/Converter (AC/DC, DC/DC, DC/AC)
- Measurable instrument
- Consumer electronics
- Note book
- PC power pack
- LED driver
- Others (Auto tronics… etc.)

■ Features

- Ideal for all types of current sensing, voltage division and pulse applications including switching and linear power supplies, instruments, power amplifiers.
- Very low inductance 0.5nH to 5nH.
- Stable high frequency characteristic with reduced lead inductance and excellent frequency response.
- Low thermal EMF (<1μV/°C).
- Pure tin plating provides compatibility with lead (Pb) free and lead containing soldering processes.
- Excellent stability (|ΔR/R| ≤ ± 0.5% for 1000h at 100°C) different environmental conditions.

TEL: 886-7-8116611 FAX: 886-7-8115533 E-mail: service@everohms.com http://www.everohms.com

■ Type Dimension

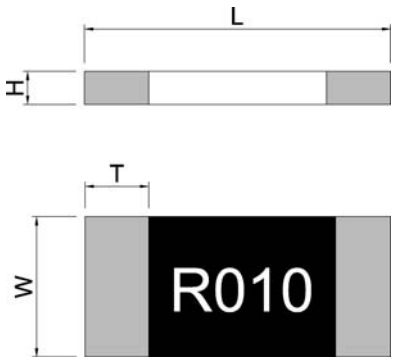

■ Dimension

Unit: mm

TYPE	Resistance Range mΩ	L	W	H	T
LR1206 1W	1~50	3.15±0.254	1.60±0.254	0.750±0.254	0.50±0.254
LR2010 1W	0.5~3	5.10±0.254	2.54±0.254	0.8±0.254	1.295±0.254
	4~100				0.8±0.254
LR2512 1W, 1.5W, 2W	0.5~4	6.25±0.254	3.30±0.254	0.8±0.254	1.88±0.254
LR2512 1W, 1.5W	4.1~100				1.13±0.254
LR2512 2W	4.1~75				1.13±0.254
LR2512 3W	0.5				1.88±0.254
	0.6~2.9 & 4.1~10				1.13±0.254
	3~4				1.68±0.254
LR2725 4W	0.25, 0.5	6.8±0.254	6.007±0.254	1.0±0.254	2.15±0.254
	1			1.1±0.254	2.15±0.254
	1.5			1.0±0.254	2.15±0.254
	2			0.9±0.254	1.8±0.254
	2.5				1.65±0.254
	3				1.3±0.254
LR2728 3W, 3.5W, 4W	4~100	6.7±0.254	7.2±0.254	1.0±0.254	1.15±0.254
LR4527 3W, 5W	0.5~5	11.43± 0.254	6.85± 0.254	1.50± 0.254	3.215±0.254
	5.1~120				1.815±0.254

- For non-standard parts, please contact our sales dept.

Remark: 1.0 Watts with total solder pad trace size of 100mm^2
1.5 Watts with total solder pad trace size of 200mm^2
2.0 Watts with total solder pad trace size of 300mm^2
3.0 Watts with total solder pad trace size of 300mm^2
3.5 Watts with total solder pad trace size of 300mm^2
4.0 Watts with total solder pad trace size of 300mm^2
5.0 Watts with total solder pad trace size of 625mm^2

TEL: 886-7-8116611 FAX: 886-7-8115533 E-mail: service@everohms.com http://www.everohms.com

■ Standard Electrical Specifications

Type	Power Rating at 100℃	T.C.R. (ppm/℃)	Max. Rating Current	Max. Overload Current	Resistance Range mΩ			Operating Temperature Range (℃)
					0.5% (D)	1.0% (F)	5.0% (J)	
LR1206	1W	±50	31.62A	63.25A	7~50mΩ	1~50mΩ		- 55 ~ + 170
LR2010	1W	±50	44.72A	89.44A	7~100mΩ	0.5~100mΩ		
LR2512	1 W	±50	44.72A	100.00A	7~100mΩ	0.5~100mΩ		
	1.5 W	±50	54.77A	122.48A	7~100mΩ	0.5~100mΩ		
	2 W	±50	63.25A	126.49A	7~75mΩ	0.5~75mΩ		
	3 W	±50	77.46A	134.16A	7~10mΩ	0.5~10mΩ		
LR2725	4 W	±50	126.49A	252.95A	---	0.25~3mΩ		
LR2728	3 W	±50	27.39A	47.43A	4~100mΩ			
	3.5 W	±50	29.58A	51.23A	4~100mΩ			
	4 W	±50	31.62A	63.25A	4~50mΩ			
LR4527	3W	±50	77.5A	134A	7~120mΩ	0.5~120mΩ		
	5W	±50	100A	200A	7~120mΩ	0.5~120mΩ		

TEL: 886-7-8116611 FAX: 886-7-8115533 E-mail: service@everohms.com http://www.everohms.com

■ Recommend Land Pattern Design (For Reflow Soldering)

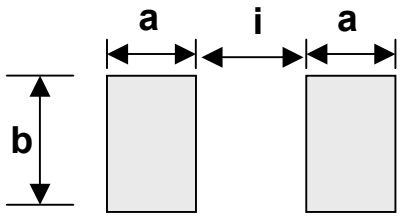

■ Dimension

Unit: mm

Type	Resistance Range mΩ	a	b	i
LR1206 - 1W	1~50	1.60	2.18	0.66
LR2010 - 1W	0.5~3	1.80	2.92	1.22
	4~100	2.29	2.92	2.41
LR2512 - 1W, 1.5W, 2W	0.5~4	3.05	3.68	1.27
LR2512 - 1W, 1.5W.2W	4.1~100	2.11	3.68	3.18
LR2512 - 3W	0.5	3.05	3.68	1.27
	0.6~10	2.11	3.68	3.18
LR2725 - 4W	0.25 ~3	3.18	6.86	1.32
LR2728 – 3W, 3.5W, 4W	4~100	2.75	7.82	3.51
LR4527 - 3W, 5W	0.5~3.0	4.80	8.74	5.51
	3.1~120	3.40	8.74	8.31

● Packaging Information

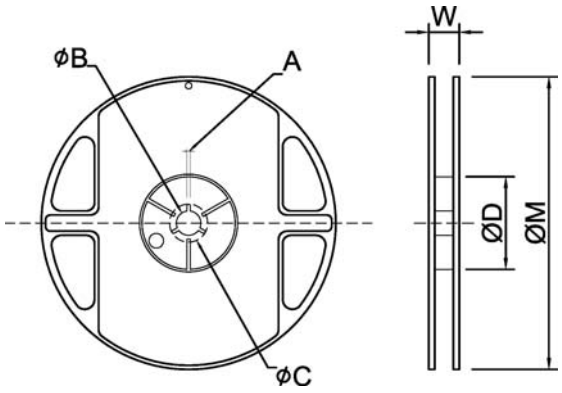

■ Dimension

Unit: mm

Reel Type / Tape	A	ϕB	ϕC	ϕD	W	ϕM
7" reel for 12 mm embossed	2.5 ± 0.5	13.5 ± 0.5	17.7 ± 0.5	60.0 ± 0.5	16.2 ± 0.5	178 ± 1.0
7" reel for 8 mm embossed (for LR1206 only)	2.0 ± 0.5	13.2 ± 0.5	17.7 ± 0.5	60.0 ± 0.5	12.00± 0.5	178 ± 1.0
7" reel for 24 mm embossed	2.0 ± 0.5	13.5 ± 0.5	17.7 ± 0.5	60.0 ± 0.5	24.4 +2.0	178 ± 1.0

TEL: 886-7-8116611 FAX: 886-7-8115533 E-mail: service@everohms.com http://www.everohms.com

■ Embossed Dimension

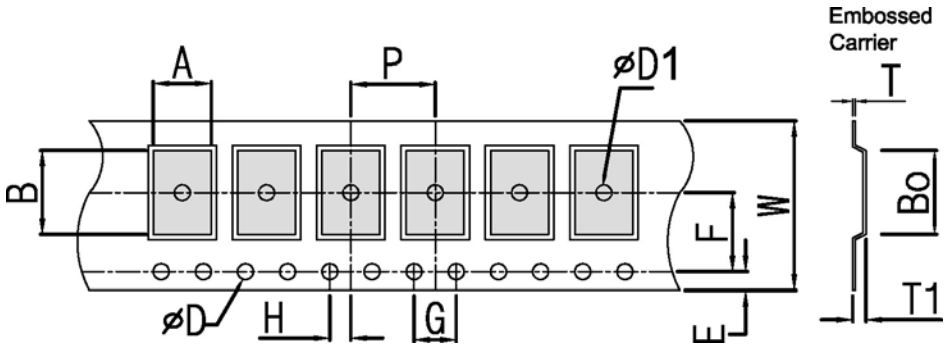

■ Dimension Unit: mm

Item	W	P	E	F	øD	øD1	G	H	A	Bo	T1	T
LR1206	8.00	4.00	1.75	3.50	1.55	1.00	4.00	2.00	1.83	3.50	0.90	0.20
LR2010.	12.00	4.00	1.75	5.50	1.50	1.50	4.00	2.00	2.90	5.45	1.10	0.23
LR2512	12.00	8.00	1.75	5.50	1.55	1.50	4.00	2.00	3.90	6.74	1.08	0.24
LR2725	12.00	8.00	1.75	5.50	1.50	1.50	4.00	2.00	6.75	7.15	1.70	0.25
LR2728	12.00	12.00	1.75	5.50	1.55	1.55	4.00	2.00	7.70	7.15	1.20	0.25
LR4527	24.00	12.00	1.75	11.50	1.55	1.50	4.00	2.00	7.12	11.70	1.55	0.30

■ Parts Number Explanation

■ Example:

LR	1206	J	0R05	E	04	1W
Product Type	Size (Inch)	Resistor Tolerance	Resistors Value	Package	Quantity	Power (Watts)
	0805 1206 2010 2512 2725 2728 4527	D：±0.5% F：±1% G：±2% J：±5%		E：Embossed Taping	01：1000PCS 02：2000PCS 04：4000PCS 05：5000PCS	1W 1.5W 2W 3W 3.5W 4W 5W

TEL: 886-7-8116611 FAX: 886-7-8115533 E-mail: service@everohms.com http://www.everohms.com

■ Test Procedures and Requirements

Test Item	Test Method	Procedure	Requirements
Temperature Coefficient of Resistance (TCR)	JIS C 5201 clause 4.8	TCR (ppm/℃) = $\frac{R2-R1}{R1\ (T2-T1)} \times 10^6$ R1：resistance of room temperature (T1) R2：resistance of 150 °C (T2)	Refer to Ratings
Short Time Overload	JIS C 5201 clause 4.13	3 times rated power for LR2512-3W, LR2728-3W, LR2728-3.5W 4 times rated power for LR1206-1W, LR2010-1W, LR2512-2W, LR2725-4W, LR2728-4W, LR4527-3W/5W 5 times rated power for LR2512-1W, LR2512-1.5W Rating power duration: 5secs	±(0.5%+0.0005Ω)△R
Insulation Resistance	JIS C 5201 clause 4.6	100±15V_{DC} for 1 minute	≧10^9Ω
Dielectric Withstanding Voltage	JIS C 5201 clause 4.7	Applied 500V_{AC} for 1 minute, and Limit surge current 50 mA (max.)	Without break down
Resistance to Solder Heat	JIS C 5201 clause 4.18	Solder temp./immersion time: 260±5°C, 10±1secs and 350±10°C, 3.5±0.5secs	±(0.5%+0.0005Ω)△R
Solderability Test	JIS C 5201 clause 4.17	Specimen prep.: 4 hours ± 15 min. Steam Aging；Solder Bath/Dip and Look Test, 245±5°C, 3±1 secs	95% coverage
Vibration	JIS C 5201 clause 4.22	Frequency varied 55Hz in one minute, 3 orientations @ Total duration 12 hours	±(0.5%+0.0005Ω)△R
Resistance to Solvent	JIS C 5201 clause 4.29, 4.30	Immersion time: 60±5 secs @ 20°C～25°C	±(0.5%+0.0005Ω)△R
Mechanical Shock	JIS C 5201 clause 4.21	100 grams for 6 milliseconds, 5 pulses	±(0.5%+0.0005Ω)△R
Low Temperature Exposure (Storage)	JIS C 5201 clause 4.23.4	1,000 hours @ -55°C	±(0.5%+0.0005Ω)△R
High Temperature Exposure (Storage)	JIS C 5201 clause 4.23.2	1,000 hours @ + 155°C	±(1.0%+0.0005Ω)△R
Temperature Cycling (Rapid Temperature Change)	JIS C 5201 clause 4.19	Air to air, - 55°C to + 150°C, 1,000 cycles, 15 minutes at each extreme, transition time 2 to 3 minutes	±(0.5%+0.0005Ω)△R
Moisture Resistance (Climatic Sequence)	JIS C 5201 clause 4.23	Mil-STD-202, Method 106, 0% power, 7a and 7b not required, t = 24 h/cycle, 10 cycles, Unpowered,	±(0.5%+0.0005Ω)△R
Bias Humidity	JIS C 5201 clause 4.24	+ 85 °C, 85% RH, 10% Bias, Extended Life Test: 1,000 hours, 1.5 hours On, 0.5 hours Off	±(0.5%+0.0005Ω)△R
Load Life	JIS C 5201 clause 4.25.1	Test temperature 100 °C Rated continuous working voltage, Extended Life Test: 1,000 hours, 1.5 hours On，0.5 hours Off	±(1.0%+0.0005Ω)△R

TEL: 886-7-8116611 FAX: 886-7-8115533 E-mail: service@everohms.com http://www.everohms.com

■ Power Derating Curve

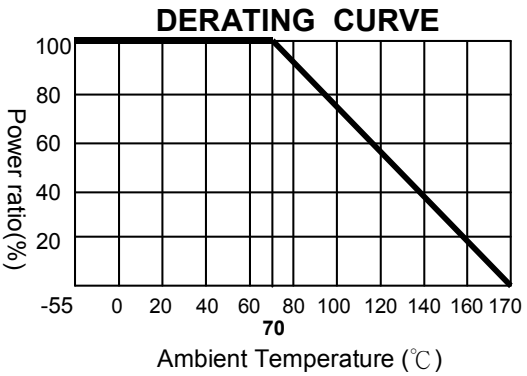

■ Recommend Soldering Conditions:

Surface-mount components are tested for solderability at a temperature of 245 °C for 3 seconds. Typical examples of soldering processes that provide reliable joints without any damage are given in below:

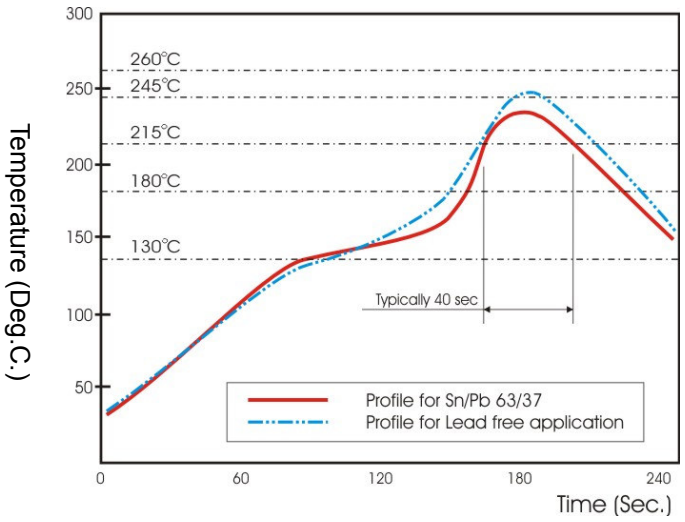

Recommended IR Reflow Soldering Profile

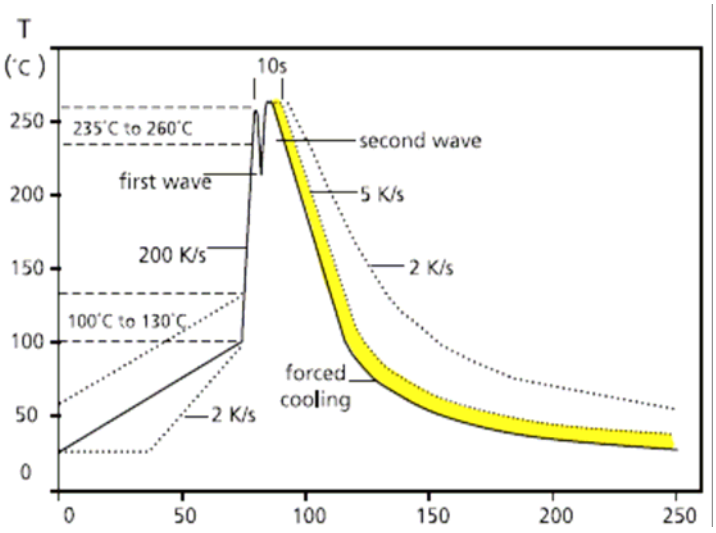

Recommended double-wave Soldering Profile

Typical values (solid line)

Process limits (dotted line)

TEL: 886-7-8116611 FAX: 886-7-8115533 E-mail: service@everohms.com http://www.everohms.com