1. Scope :

This specification applies for the CN series of thick film chip resistor arrays made by TA-I.

2. Construction , Dimensions , Schematic :

2.1 Construction :

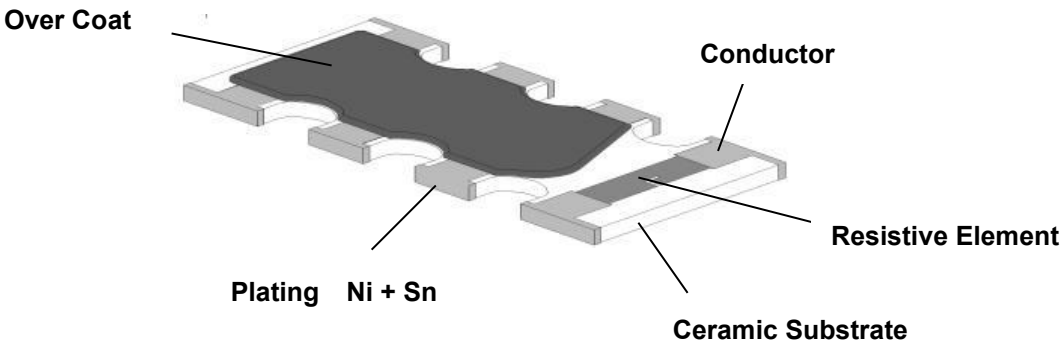

2.1.1 Chip Resistor Arrays :

CN22

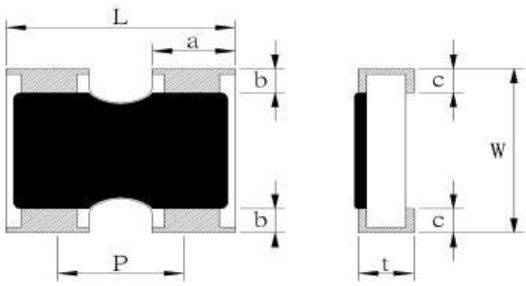

CN24 / 34

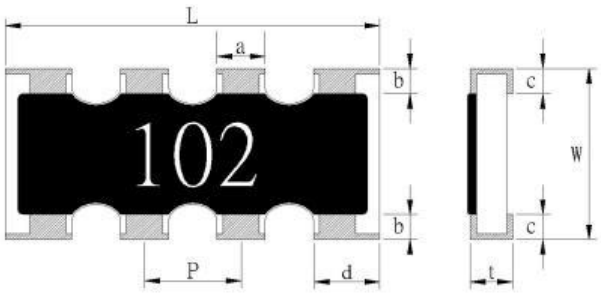

2.2 Dimension :

UNIT: mm

Type	L	W	t	P	a	b	c	d
CN22	1.0 ± 0.1	1.0 ± 0.1	0.35 ± 0.1	0.65 ± 0.1	0.33 ± 0.1	0.15 ± 0.1	0.25 ± 0.1	0.33 ± 0.1
CN24	2.0 ± 0.1	1.0 ± 0.1	0.4 ± 0.1	0.5 ± 0.05	0.3 ± 0.1	0.15 ± 0.1	0.25 ± 0.1	0.4 ± 0.1
CN34	3.2 ± 0.2	1.6 ± 0.15	0.5 ± 0.1	0.8 ± 0.05	0.45 ± 0.1	0.3 ± 0.2	0.3 ± 0.2	0.6 ± 0.1

2.3 Schematic :

R TYPE

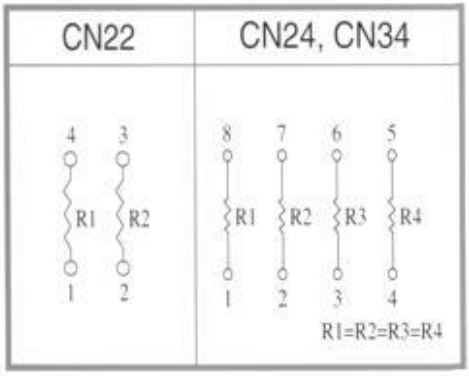

3. Type Designation :

3.1 Chip Resistor Arrays

CN 34 J TN 103

Product Code	size	Tolerance	Packaging	Nominal
CN : Chip Resistor Array	Power Rating			Resistance
	22-0402*2 24-0402*4 34-0603*4	J-±5% G-±2% F-±1%	T- Paper Tape N：normal (RoHS Exclusion clause) W：Totally Lead free	3 digits E.G.: (E-24) 103 = 10KΩ 5R6 = 5.6Ω 0 = 0Ω 4 digits E.G. : (E-96) 1540 = 154Ω 43R2 = 43.2Ω

Note :

TN : Lead-Free products packaged by paper tape.

4. Ratings & Characteristics :

Type	Power Rating at 70℃	Rating Voltage	Max. Working Voltage	Max. Over Load Voltage	Operating Temp. (℃)	Resistance Tolerance (%)	Resistance Range (Ω)	Temp Co-efficient PPM/℃
CN22	1/16W	Refer 4.2	25V	50V	-55 ∫ +125℃	±5% ±2% ±1%	10Ω~1MΩ	±250
CN24								
CN34			50V	100V			10Ω~1MΩ	±200
CN34			50V	100V		±5%	3.0Ω~9.1Ω	±400
CN22			25V	50V				±500
CN24								

0Ω THICK FILE CHIP RESISTOR ARRAYS			
Type	Rate Current	Max Overload Current	Resistance Range
CN Series	1A	2.5A	50mΩ MAX

4.1 Derating Curve :

For resistors operated at ambient temperature over 70℃ , power rating shall be derated in accordance with figure 1.

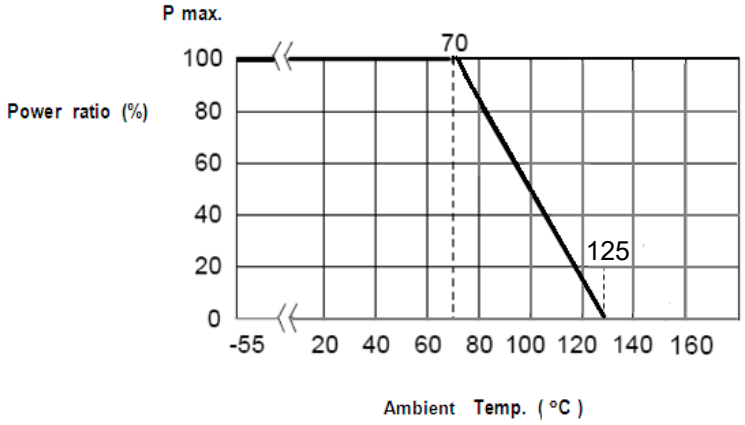

Figure 1

4.2 Rated Voltage:

The rated voltage is calculated by the following formula:

$E = \sqrt{P * R}$ E=Rated Voltage(V)

P=Rated Power(W)

R=Resistance Value(Ω)

E.G. : What is CN34JTN102 the rated voltage ?

CN34JTN102 P:1/16W ; R:102 = 1KΩ = 1000Ω

$E = \sqrt{0.0625(W) * 1000(\Omega)} = 7.9\ (V)$

5. Reliability Tests:

Test Items	Reference standard	Condition of Test	Test Limits (△R)
Temperature Coefficient of Resistance	IEC60115-1-4.8 JIS-C5201-1-4.8	-55～ +125 ℃	Refer 4.0
Short Time Overload	IEC60115-1-4.13 JIS-C5201-1-4.13	2.5 X rated voltage for 5 sec	±(2.0% + 0.1Ω) 0Ω：50 mΩ or less
Intermittent Overload	IEC60115-1-4.39 JIS-C5201-1-4.39	2.5X rated voltage or Max Overloading Voltage , 1 sec “ON” 25 sec “OFF” , 10000 cycles	±(5.0% + 0.1Ω) 0Ω：50mΩ or less
Load Life	IEC60115-1-4.25.1 JIS-C5201-1-4.25.1	1000 hours at rated voltage , 70℃ , 1.5hours “ON “, 0.5hour “OFF”	1%：±(1.0% + 0.05Ω) 5%：±(3.0% + 0.1Ω) 0Ω：100 mΩ or less
Load Life with Humidity	IEC60115-1-4.24 JIS-C5201-1-4.24	1000 hours at rated voltage , 40±2℃, 90~95% RH 1.5hours “ON “, 0.5hour “OFF”	1%：±(1.0% + 0.05Ω) 5%：±(3.0% + 0.1Ω) 0Ω：100 mΩ or less
Rapid Change of Temperature	IEC60115-1-4.19 JIS-C5201-1-4.19	-55℃ (30 min.) / +155 ℃(30 min.) 5 cycles	1%：±(0.5% + 0.05Ω) 5%：±(1.0% + 0.05Ω) 0Ω：50 mΩ or less
Solderability	IEC60115-1-4.17 JIS-C5201-1-4.17	245±5℃ solder, 2±0.5 sec dwell. Solder : Sn96.5 / Ag3.0 / Cu0.5	At least 95% of surface area of electrode shall be covered with new solder.
Core body	IEC60115-1-4.15 JIS-C5201-1-4.15	Pressure 1.0 kgf a R0.5 pressure rod for 10 sec	Without mechanical damage such as breaks. Electrical characteristics shall be satisfied
Dielectric Withstanding Voltage (Voltage Proof)	IEC60115-1-4.7 JIS-C5201-1-4.7	Applying voltage 100V for 1 minute.	No abnormalities such as flashover, burning dielectric breakdown shall appear.
Resistance to Solder Heat	IEC60115-1-4.18 JIS-C5201-1-4.18	270 ±5℃ solder , 10 ±1 sec dwell .	0.5%,1%：±(1.0% + 0.05Ω) 2%,5%：±(2.0% + 0.1Ω) 0Ω：50mΩ or less

Note* : RCWV : Rated continuous working voltage .

Moisture Sensitivity Level：Level 1

6. Marking

6.1 ±2% & ±5%(E24) : CN24 / 34

Resistance value is expressed by 3 digits, the first two digits represent the significant figures of nominal resistance value in Ω, and the third digit represents exponent for base of 10.

E.G. $472 = 47 \times 10^2 = 4700\,\Omega = 4.7K\,\Omega$

6.2 ±1% (E96) : CN24 / 34

Resistance value is expressed by 4 digits, the first three digits represent the significant figures of nominal resistance value in Ω, and the fourth digit represents exponent for base of 10.

E.G. $4701 = 470 \times 10^1 = 4700\,\Omega = 4.7K\,\Omega$

6.3 CN24 / 34

E.G. : 0 = 0Ω

6.4 No Marking for CN22

7. Taping & Reel

7.1 Taping Dimensions

7.1.1 2 mm pitch paper

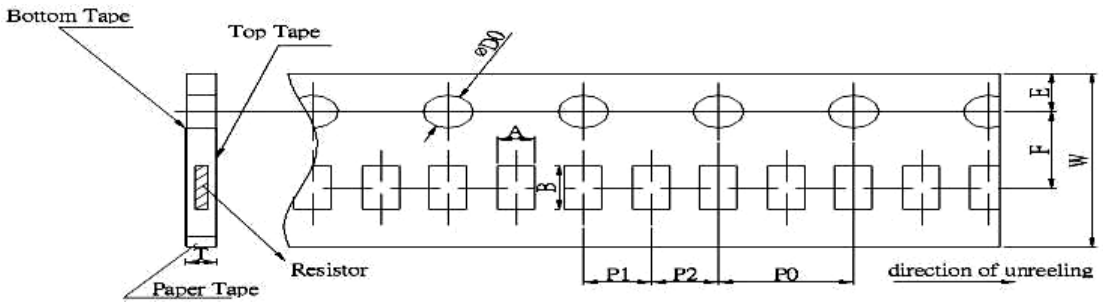

UNIT: mm

Type	A	B	W	F	E	P1	P2	P0	φD0	T0
CN22	1.2±0.15	1.2±0.1	8.0±0.2	3.5±0.05	1.75±0.1	2.0±0.1	2.0±0.05	4.0±0.1	φ1.5 +0.1 -0	0.45±0.1
CN24		2.2±0.2								0.64±0.1

7.1.2 4 mm pitch paper

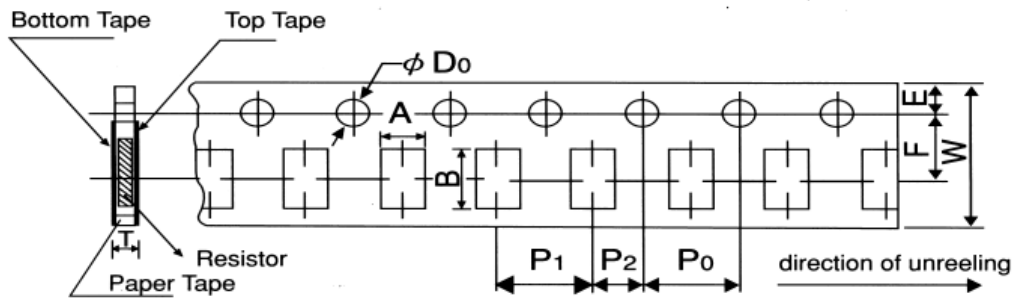

UNIT: mm

Type	A	B	W	F	E	P1	P2	P0	ϕ D0	T
CN34	2.0±0.15	3.6±0.2	8.0±0.2	3.5±0.05	1.75±0.1	4.0±0.1	2.0±0.05	4.0±0.1	ϕ 1.5 +0.1 -0	0.84±0.1

Package Type	Paper Tape			
	4 mm pitch		2 mm pitch	
	178mm/R	250mm/R	178mm/R	250mm/R
CN22			10000	20000
CN24			10000	20000
CN34	5000	10000		

7.2 Reel Specifications

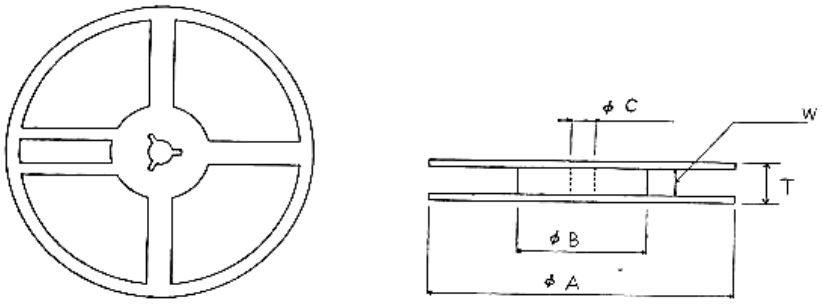

UNIT: mm

Type	ϕ A	ϕ B	ϕ C	W	T
CN 22/24/34	178.0 ± 2.0	60.0 ± 1.0	13.0 ± 1.0	9.0 ± 1.0	11.5 ± 1.0

7.3 Peel off Strength:

Peel –off force of paper and blister tape is in accordance with “JIS-C5202”

that is , 0.1 to 0.7 N at a peel-off speed of 300 mm / minute.

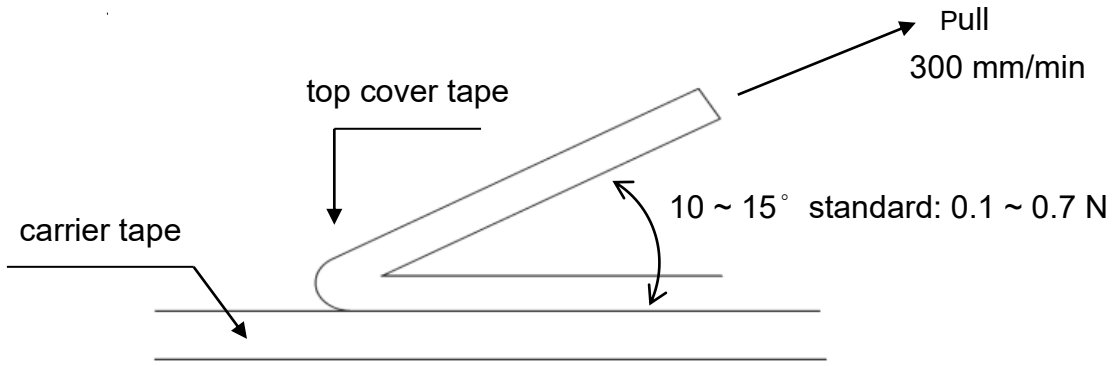

8. Recommended land patterns :

8.1 CN22, CN34

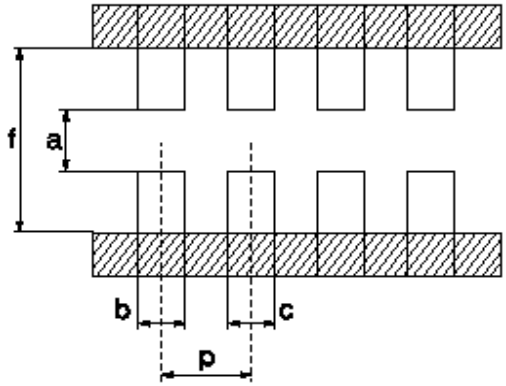

Type \ Land pattern / Size		Dimension (mm)				
		a	b	c	p	f
CN	22	0.5	0.35~0.4	0.35~0.4	0.65	1.4~1.5
CN	34	0.7~0.9	0.4~0.5	0.4~0.5	0.8	2.2~2.6

8.2 CN24

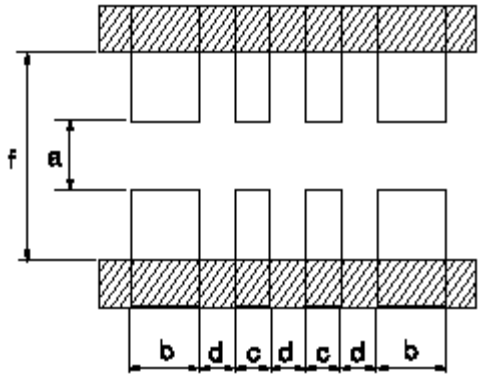

Type \ Size / Land pattern		Dimension (mm)				
		a	b	c	d	f
CN	24	0.4	0.525	0.25	0.25	1.4

9. Recommend IR – Reflow profile : (solder : Sn96.5 / Ag3 / Cu0.5)

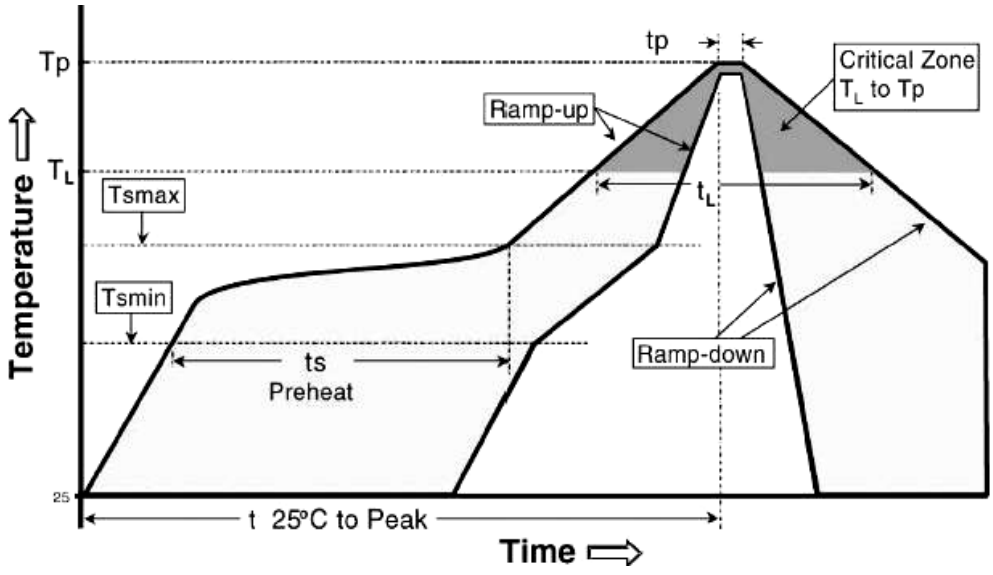

Profile Feature	Lead (Pb)-Free Assembly
Average ramp-up rate (Tsmax to Tp)	3℃ / second max.
Preheat - Temperature Min (Ts_{min}) - Temperature Max (Ts_{max}) - Time (Ts_{min} to Ts_{max}) (ts)	 150℃ 200℃ 60 -120 seconds

Time maintained above : - Temperature (T_L) - Time (T_L)	217℃ 60-150 seconds
Peak Temperature (Tp)	260℃
Time within $^{+0}_{-5}$℃ of actual Peak Temperature $(tp)^2$	10 seconds
Ramp-down Rate	6℃/second max.
Time 25℃ to Peak Temperature	8minutes max.

Allowed Re-flow times：3 times

Remark：To avoid discoloration phenomena of chip on terminal electrodes, please use N2 Re-flow furnace.

10. Storage Conditions:

Temperature : 5 to 35 ℃

Related Humidity :40 to 75% RH

11. Shelf Life :

2 Years from manufacturing date.

12. ECN :

Engineering Change Notice: The customer will be informed with ECN if there is significant modification on the characteristics and materials described in Approval Sheet.