Ambient Light Sensor

■ GENERAL DESCRIPTION

The NJL7502L is the photo transistor which spectral response is similar to human eye.

■ FEATURES

1. Peak wavelength 560 nm
2. Photo current 33 μA typ. Condition : White LED, 100Lux
3. Lead pin package

■ APPLICATIONS

Room light, Toy, TV, PDP, Clock, Refrigerator, etc.

to adjust the luminance of display

to control ON/OFF

Replacement of CdS

■ ABSOLUTE MAXIMUM RATINGS (Ta=25°C)

PARAMETER	SYMBOL	RATINGS	UNIT
Collector - Emitter Voltage	V_{CEO}	70	V
Emitter - Collector Voltage	V_{ECO}	10	V
Photocurrent	I_L	10	mA
Power Dissipation	P_D	150	mW
Operating Temperature	Topr	–40 to +85	°C
Storage Temperature	Tstg	–40 to +100	°C
Soldering Temperature	Tsol	260	°C

■ ELECTRO-OPTICAL CHARACTERISTICS (Ta=25°C)

PARAMETER	SYMBOL	TEST CONDITION	MIN	TYP	MAX	UNIT
Photocurrent 1	I_{L1}	V_{CE}=5V, Light source A, 100Lux	—	46	—	μA
Photocurrent 2	I_{L2}	V_{CE}=5V, White LED, 100Lux	15	33	73	μA
Dark Current	I_D	V_{CE}=20V	—	—	0.1	μA
Peak Wavelength	λ_P	—	—	560	—	nm
Collector - Emitter Saturation Current	$I_{CE(sat)}$	V_{CE}=0.24V, White LED, 100Lux	10	—	—	μA
Emitter - Collector Voltage	V_{ECL}	I_{ECL}=1μA , White LED, 100Lux	9	—	—	V
Half Angle	$\Theta_{1/2}$	—	—	±20	—	deg.
Rise Time	tr	V_{CE}=5V, I_C=1mA, R_L=100Ω	—	10	—	μs
Fall Time	tf	V_{CE}=5V, I_C=1mA, R_L=100Ω	—	10	—	μs

■ TEST CIRCUIT

Photocurrent 1 I_{L1}

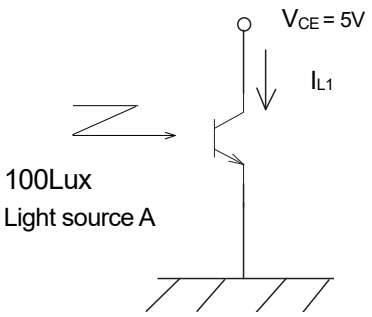

Collector - Emitter Saturation Current $I_{CE(sat)}$

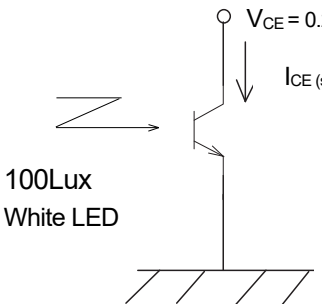

Photocurrent 2 I_{L2}

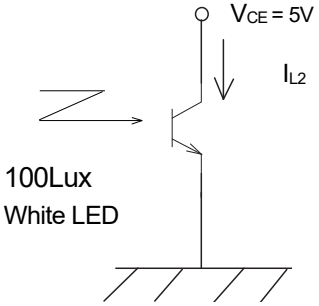

Half Angle $\Theta_{1/2}$

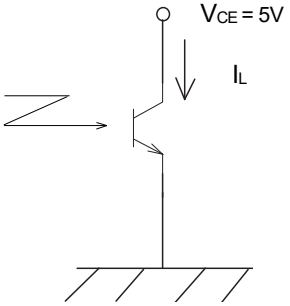

Dark Current I_{CEO}

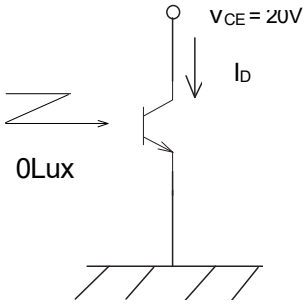

Rise Time tr
Fall Time tf

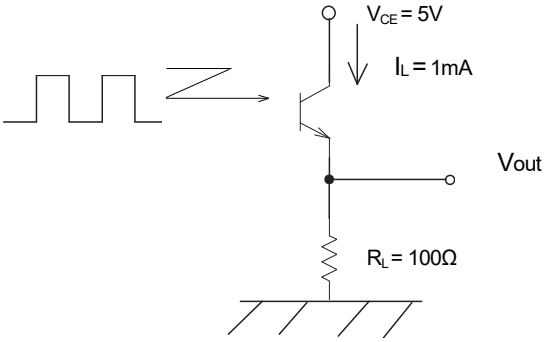

Peak Wavelength λ_P

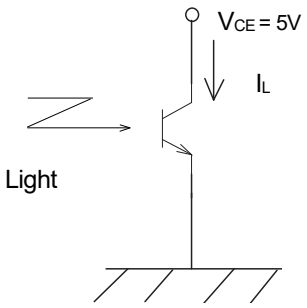

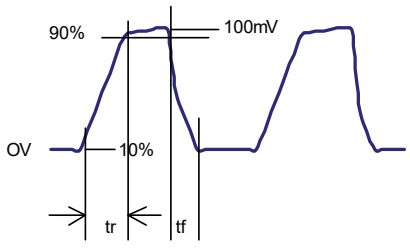

■ OUTLINE (TYP.)

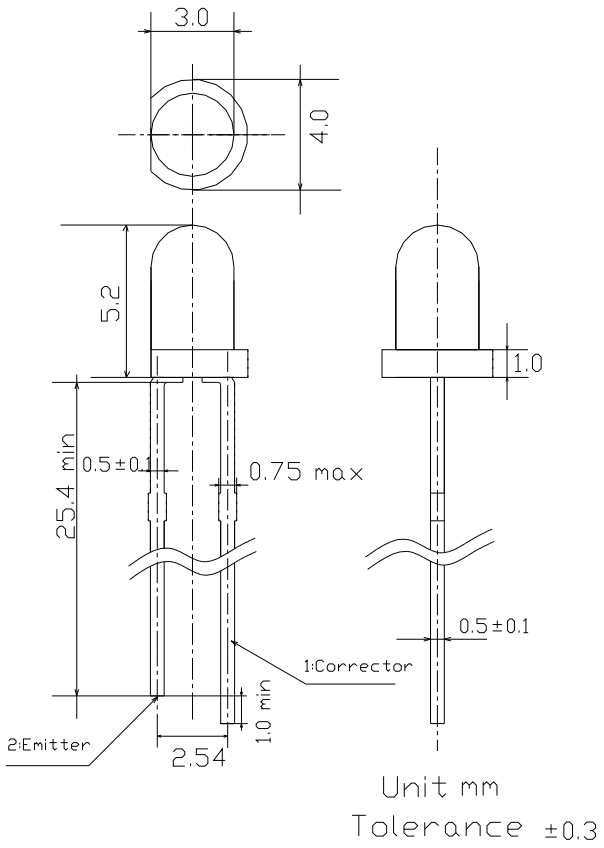

■ TYPICAL CHARACTERISTICS

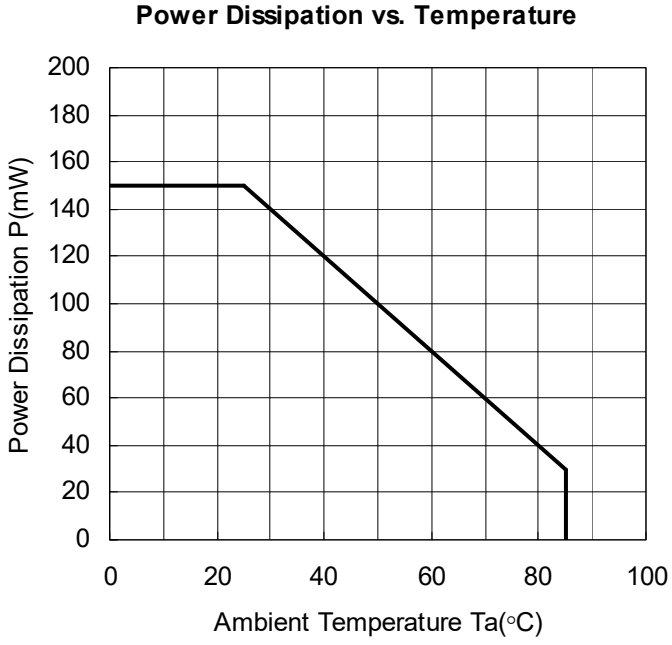

Spectral Response (Ta=25ºC)

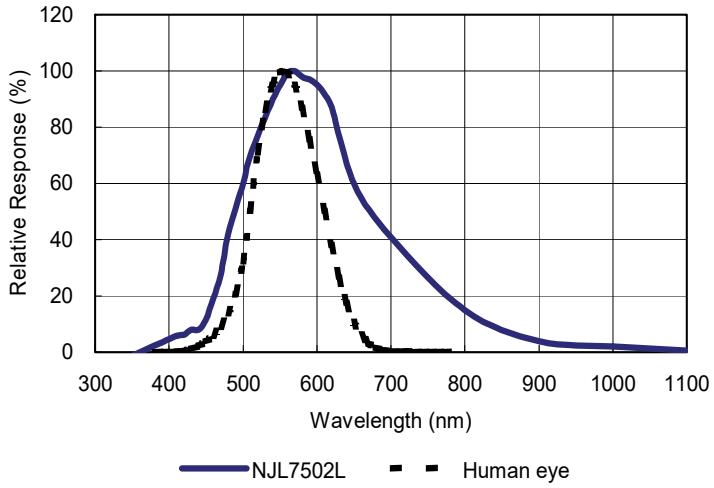

Directivity

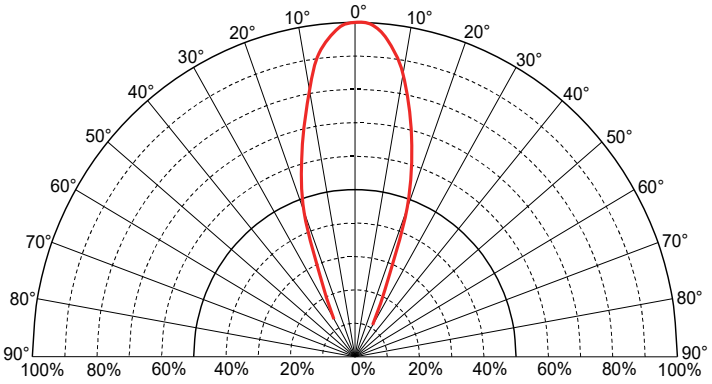

Photocurrent vs. Illuminance
(Ta=25ºC)

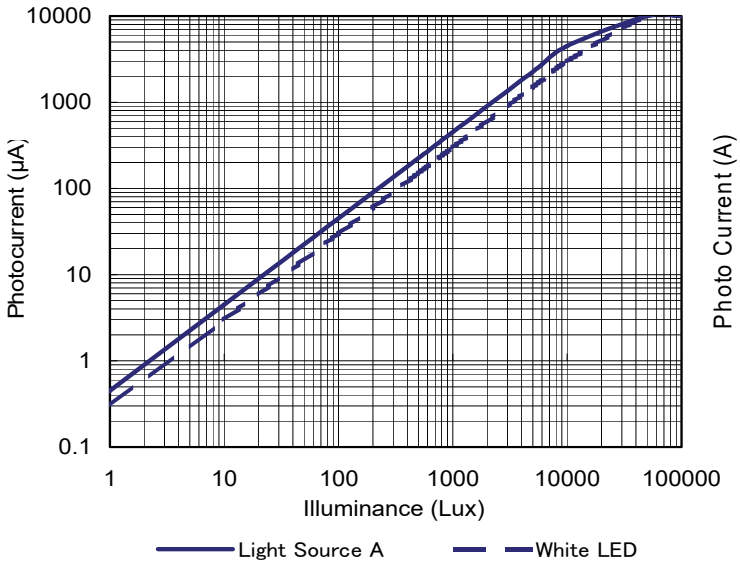

Photo Current vs. Corrector-Emitter Voltage
(Ta=25°C)

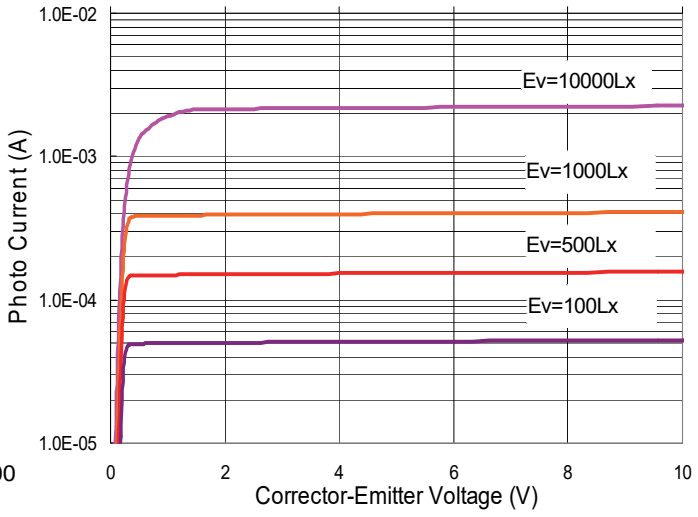

Photocurrent vs Temperature
Vce=5.0V

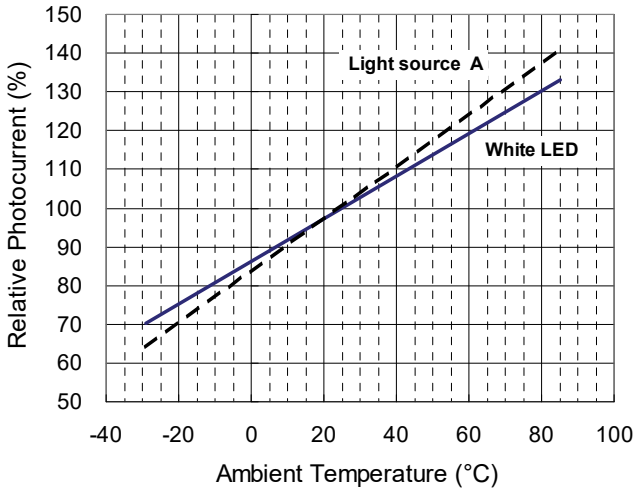

Dark Current vs. Temperature
Vce=5.0V

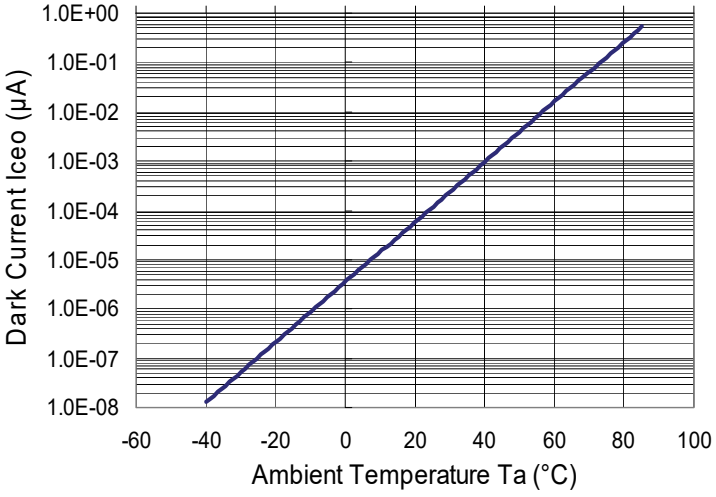

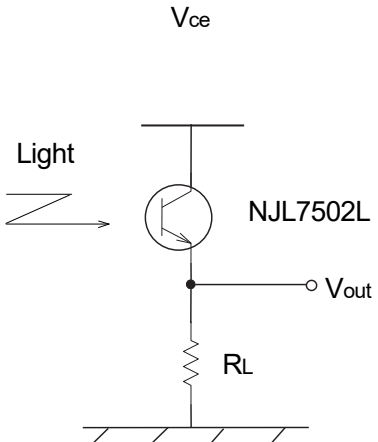

Fig1 Application Circuit

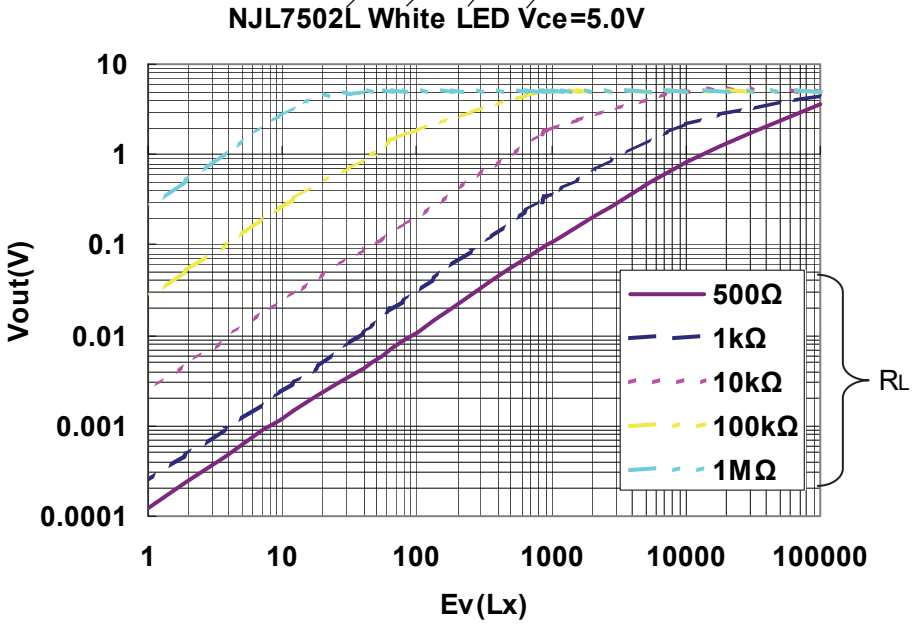

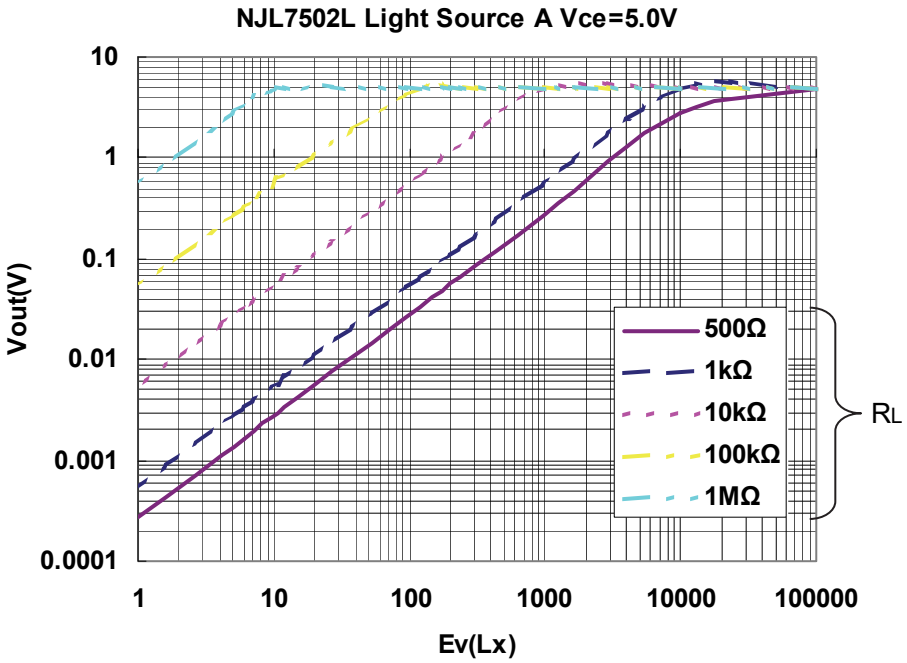

■ PACKING SPECIFICATION

《PHOTO TRANSISTOR PACKING SPECIFICATION》 UNIT : mm

【VINYL BAG SPECIFICATION】

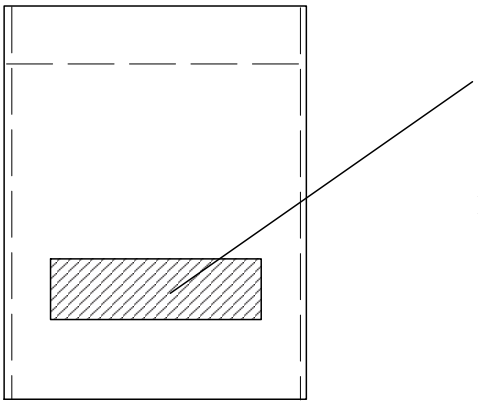

Material: Antistatic vinyl
Sealing: Heat seal
Contents: 1000pcs / bag

【OUTER PACKING SPECIFICATION】

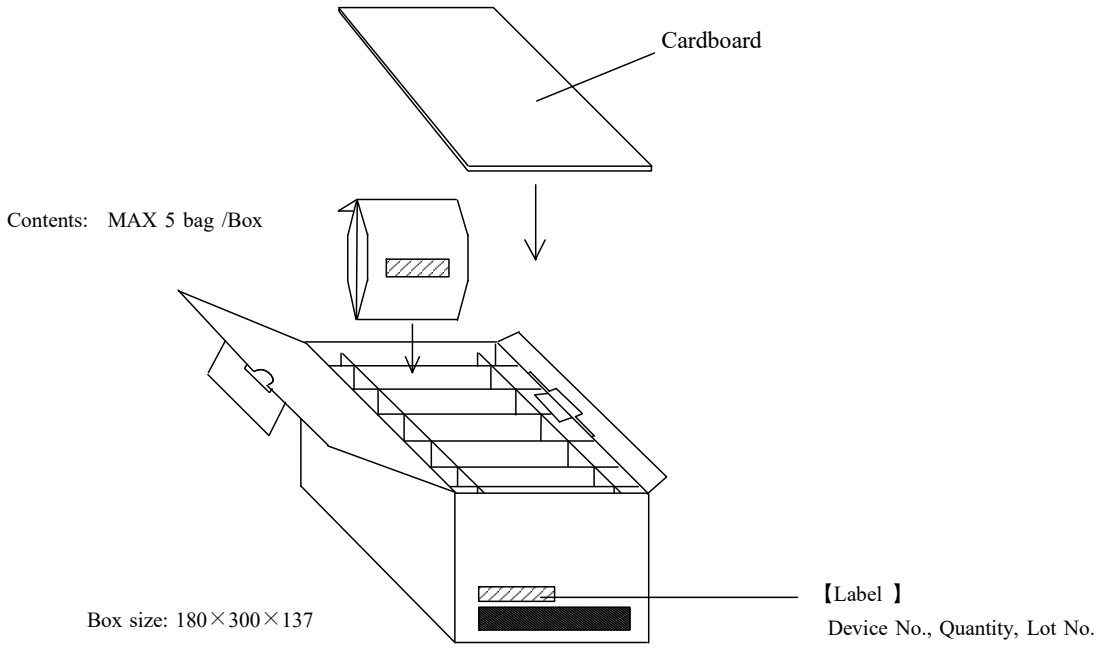

■ MOUNTING METHOD

NOTE

Mounting was evaluated with the following profiles in our company, so there was no problem.
However, confirm mounting by the condition of your company beforehand.

Mounting: Twice soldering is allowed.

REFLOW SOLDERING METHOD

*Reflow soldering is not possible.

FLOW SOLDERING METHOD

* Flow soldering is not possible.

IRON SOLDERING METHOD

* Recommended Iron Soldering conditions

Temperature of Iron	:	350°C or less
Soldering time	:	within 3s (At a lead)
Soldering Position	:	At least 4mm away from body. (Prevent the temperature rise of the body.)

(Note1) Do not apply load to body and lead when soldering.
(Note2) Do not heat the whole body when soldering.

■ CLEANING CONDITIONS

(1) Please refrain from cleaning of the device as much as possible.
A void the solvent or the vapor solvent from the resin of the device even during the mounting and using.
(2) This device can be cleaned if it is only a lead part when the cleaning of flux etc is indispensable.
How ever, clean the device by using the following solvent by the condition within 35°C and 3minute.
Solvent : isopropyl alcohol, methyl alcohol

■ IC STORAGE CONDITION AND ITS DURATION

(1) Temperature and humidity ranges.

Temperature: 5 to 40 (°C)
Humidity : 30 to 75 (%)

Normally a package product does not have a quality problem such as package crack because of absorbing humidity. However, the above stated conditions are recommended for storage. Please note that an electrostatic discharge is apt to destroy the product under the dried environment below 30%.
It is also recommended to store the products avoiding the place where it creates dew with the products due to a sudden change in temperature.

(2) Please do not expose the products in the corrosive atmosphere.
(3) Please store the products in dust free place.
(4) Please do not expose the products to a direct sun light.
(5) Please store the IC without adding a load.
(6) No need to worry about baking under above storage terms.
(7) The leads are silver plated and they are discolored if the device is left open to the air for long after taken out of the envelop. It causes deterioration of soldering characteristics. Mount the device as short as possible after opening the envelope.

■ STORAGE DURATION

Please store the products less than one year after opening the envelop is made.
For the products which storage duration are longer than one year, please check the solderability and if the leads are rusty before they are used.

[CAUTION]
The specifications on this datasheet are only given for information , without any guarantee as regards either mistakes or omissions. The application circuits in this datasheet are described only to show representative usages of the product and not intended for the guarantee or permission of any right including the industrial rights.