UNCONTROLLED DOCUMENT

PART NUMBER	SSL-LX4673YD-LA20	REV.	B
DATE	E.C.N. NUMBER AND REVISION COMMENTS		REV.
07.10.01	E.C.N. #10BRDR. & REDRAWN IN 3D.		A
08.17.12	E.C.N. #10BRDR. & REDRAWN.		B

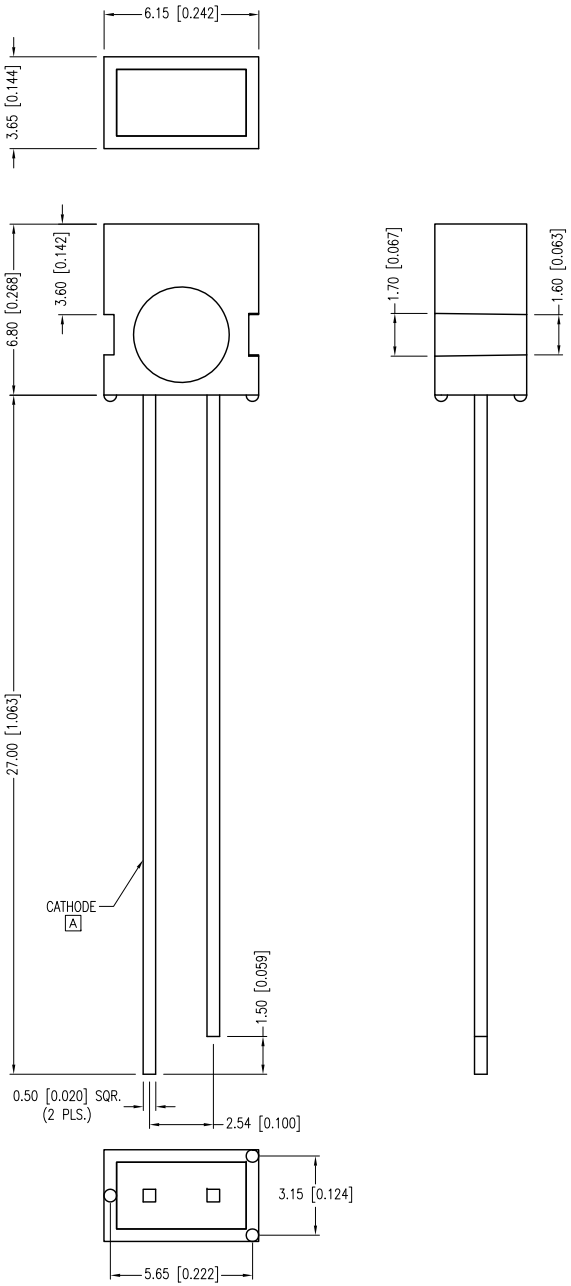

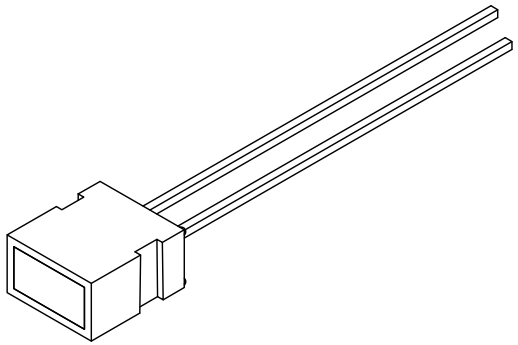

ELECTRO-OPTICAL CHARACTERISTICS Ta=25°C If=20mA

PARAMETER	MIN	TYP	MAX	UNITS	TEST COND
PEAK WAVELENGTH		585		nm	
FORWARD VOLTAGE		2.1	2.5	Vf	
REVERSE VOLTAGE	5.0			Vr	Ir=100µA
AXIAL INTENSITY		6		mcd	If=20mA
VIEWING ANGLE		100		2x theta	
EMITTED COLOR:	YELLOW				
LENS FINISH:	YELLOW DIFFUSED				

LIMITS OF SAFE OPERATION AT 25°C

PARAMETER	MAX	UNITS
PEAK FORWARD CURRENT*	150	mA
STEADY CURRENT	30	mA
POWER DISSIPATION	105	mW
DERATE FROM 25°C	-1.2	mW/°C
OPERATING TEMP.	-40 TO +85	°C
STORAGE TEMP.	-40 TO +85	°C
SOLDERING TEMP.	+260	°C
2.0mm FROM BODY	3	SEC.

* t<10µS

*UNLESS OTHERWISE SPECIFIED TOLERANCES PER DECIMAL PRECISION ARE: X=±1 (±0.039), X.X=±0.5 (±0.020), X.XX=±0.25 (±0.010), X.XXX=±0.127 (±0.005). LEAD SIZE=±0.05 (±0.002), LEAD LENGTH=±0.75 (±0.030). MIN= $^{+\text{DECIMAL PRECISION}}_{-0.00}$ MAX.= $^{+0.00}_{-\text{DECIMAL PRECISION}}$

UNCONTROLLED DOCUMENT

LUMEX
Creating LED and LCD Solutions Together™
290 E. HELEN ROAD
PALATINE, IL 60067-6976
PHONE: +1.847.359.2790
FAX: +1.847.359.6538
WEB: WWW.LUMEX.COM
MEMBER OF ITW PHOTONICS GROUP

QUASARBRITE 4mm x 7mm RECT LED, 585nm YELLOW, YELLOW DIFFUSED.

THE SPECIFICATIONS MAY CHANGE AT ANY TIME WITHOUT NOTICE DUE TO NEW MATERIALS OR PRODUCT IMPROVEMENT.

CONFIDENTIAL INFORMATION
THE INFORMATION CONTAINED IN THIS DOCUMENT IS THE PROPERTY OF LUMEX INC. EXCEPT AS SPECIFICALLY AUTHORIZED IN WRITING BY LUMEX INC., THE HOLDER OF THIS DOCUMENT SHALL KEEP ALL INFORMATION CONTAINED HEREIN CONFIDENTIAL AND SHALL PROTECT SAME IN WHOLE OR IN PART FROM DISCLOSURE AND DISSEMINATION TO ALL THIRD PARTIES.

DATE:	08.17.12	DRAWN BY:	AB
PAGE:	1 OF 1	CHKD BY:	KF
SCALE:	NTS	APRVD BY:	KF
UNIT:	mm [INCH]	Pb	