LITEON®
OPTOELECTRONICS



Specific Lighting Product Data Sheet

LTW-010DCG-HP

Spec No. :DS22-2010-0104
Effective Date: 09/19/2018
Revision: F

LITE-ON DCC

RELEASE

BNS-OD-FC001/A4

LITE-ON Technology Corp. / Optoelectronics
No.90,Chien 1 Road, Chung Ho, New Taipei City 23585, Taiwan, R.O.C.
Tel: 886-2-2222-6181 Fax: 886-2-2221-1948 / 886-2-2221-0660
http://www.liteon.com/opto

Specific Lighting
LTW-010DCG-HP

1. Description

The LTW (LiteOn White LED) is a revolutionary, energy efficient and ultra compact new light source, combining the lifetime and reliability advantages of Light Emitting Diodes with the brightness of conventional lighting. It gives you total design freedom and unmatched brightness, creating a new opportunities for solid state lighting to displace conventional lighting technologies..

1.1 Features

- Package in 12mm tape on 7" diameter reels
- Compatible with automatic placement equipment.
- Compatible with infrared and vapor phase reflow solder process.
- EIA STD package.
- I.C. compatible.
- Meet green product and Pb-free(According to RoHS)

1.2 Benefits Features

- Reading lights (car, bus, aircraft)
- Portable (flashlight, bicycle)
- Downlighters/Orientation
- Decorative/Entertainment
- Bollards/Security/Garden
- Cove/Undershelf/Task
- Traffic signaling/Beacons/ Rail crossing and Wayside
- Indoor/Outdoor Commercial and Residential Architectural
- Edge_lit signs (Exit, point of sale)

2. Outline Dimensions

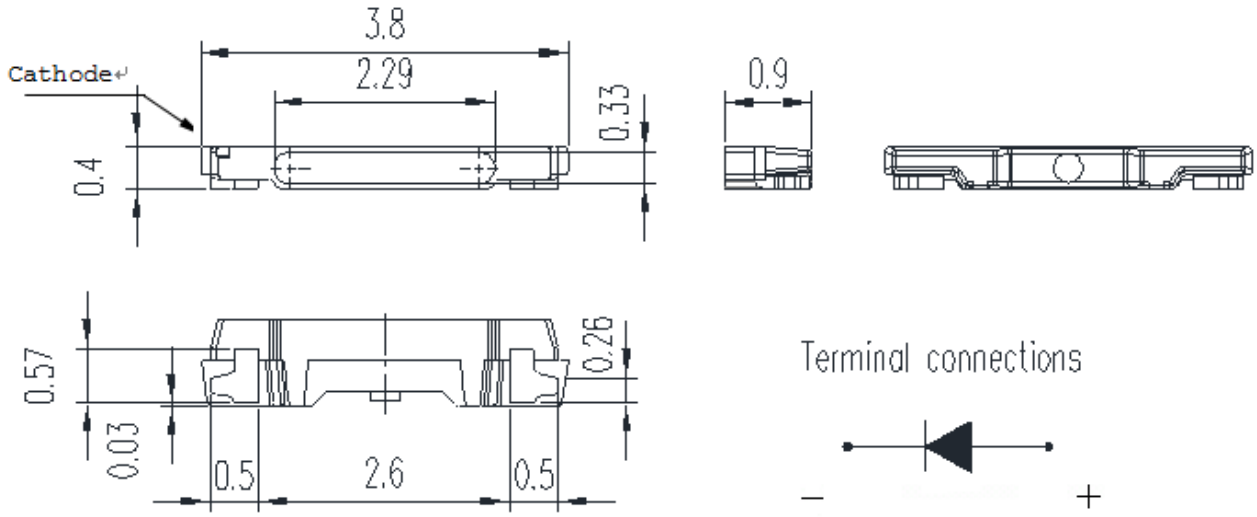

Notes :

1. All dimensions are in millimeters.
2. Tolerance is ±0.1 mm (.004") unless otherwise noted.

3. Absolute Maximum Ratings at Ta=25℃

Parameter	LTW-010DCG-HP	Unit
Power Dissipation	120	mW
Peak Forward Current (1/10 Duty Cycle, 0.1ms Pulse Width)	100	mA
DC Forward Current	30	mA
Reverse Voltage	5	V
Operating Temperature Range	-30℃ to + 85℃	
Storage Temperature Range	-40℃ to + 100℃	
Reflow Soldering Condition	260℃ For 10 Seconds	

Note: Operating the LED (in an application) under reverse bias condition might result in damage or failure of the component.

4. Suggest IR Reflow Condition

IR-Reflow Soldering Profile for lead free soldering (Acc. to J-STD-020D)

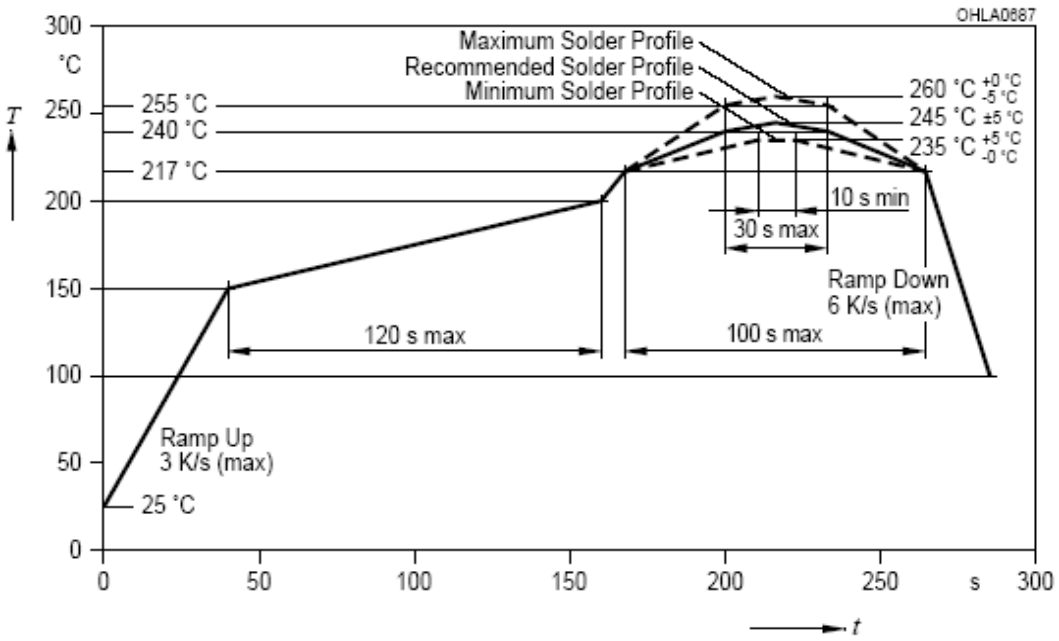

5. Electro-Optical Characteristics at Ta=25℃

Parameter	Symbol	Min.	Typ.	Max.	Unit	Test Condition
Luminous Intensity	mcd	1900		2800	mcd	IF = 20mA Note 1
Viewing Angle	2θ1/2		115		deg	Fig.6 Note 2
Chromaticity Coordinates	x		0.30			IF = 20mA Note 3, 4, 5 Fig.1
	y		0.29			
Forward Voltage	VF	2.9		3.6	V	IF = 20mA

Notes:

1. Luminous intensity is measured with a light sensor and filter combination that approximates the CIE eye-response curve.
2. θ 1/2 is the off-axis angle at which the luminous intensity is half the axial luminous intensity.
3. The chromaticity coordinates (x, y) is derived from the 1931 CIE chromaticity diagram.
4. CAS140B is the test standard for the chromaticity coordinates (x, y) & mcd.
5. The chromaticity coordinates (x, y) guarantee should be added +/- 0.01 tolerance.
6. Caution in ESD:

   Static Electricity and surge damages the LED. It is recommend to use a wrist band or anti-Slectrostatic glove when handling the LED. All devices, equipment and machinery must be properly grounded.

6. Bin Code List

V_F Spec. Table		
V_F Bin	Forward Voltage (volts) at IF = 20mA	
	Min.	Max.
V0	2.9	3.0
V1	3.0	3.1
V2	3.1	3.2
V3	3.2	3.3
V4	3.3	3.4
V5	3.4	3.5
V6	3.5	3.6

Tolerance on each Forward Voltage bin is +/- 0.1 V

Luminous Intensity Spec. Table		
IV Bin	Luminous Intensity (mcd) at IF = 20mA	
	Min.	Max.
S10	1900	2000
S11	2000	2100
S12	2100	2200
S13	2200	2300
S14	2300	2400
S15	2400	2500
S16	2500	2600
S17	2600	2700
S18	2700	2800

Tolerance on each Luminous Intensity bin is +/- 10%

Color Ranks Table											
Ranks	Color bin limits at IF = 20mA					Ranks	Color bin limits at IF = 20mA				
	CIE 1931Chromaticity coordinates						CIE 1931Chromaticity coordinates				
52B	x	0.284	0.277	0.282	0.288	BJ2	x	0.296	0.291	0.299	0.304
	y	0.255	0.265	0.272	0.262		y	0.276	0.287	0.301	0.290
A62	x	0.288	0.282	0.291	0.296	BK1	x	0.304	0.299	0.303	0.308
	y	0.262	0.272	0.287	0.276		y	0.290	0.301	0.308	0.297

Tolerance on each Hue (x, y) bin is +/- 0.01

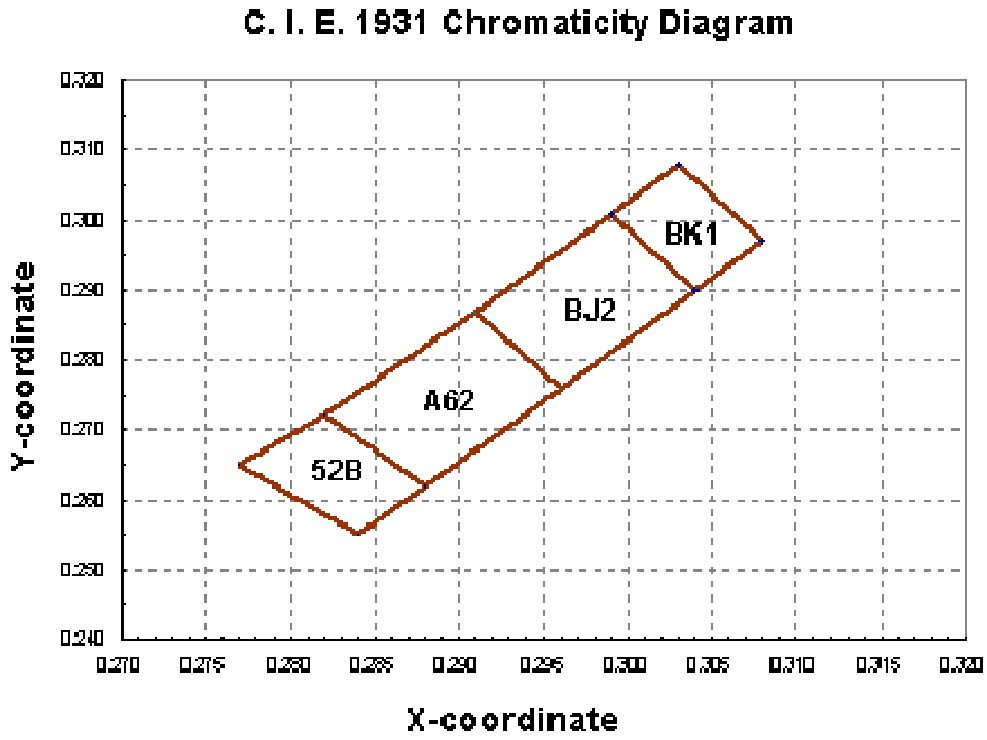

7. Typical Electrical / Optical Characteristics Curves (25°C Ambient Temperature Unless Otherwise Noted

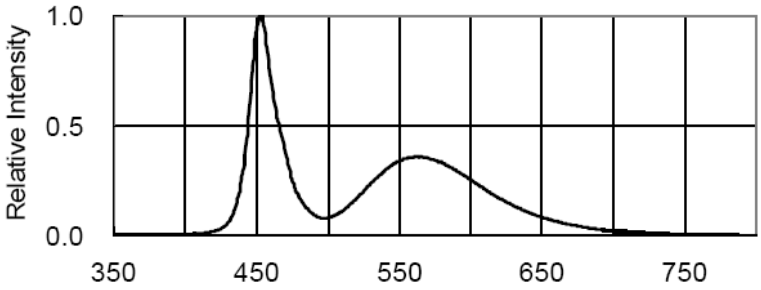

Fig.1 Relative Intensity vs. Wavelength

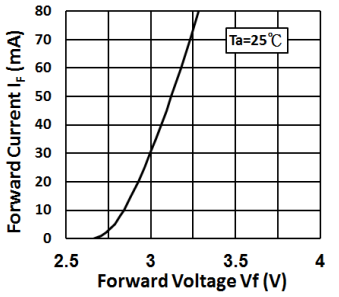

Fig.2 Forward Current vs. Forward Voltage

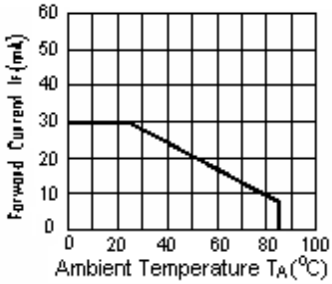

Fig.3 Forward Current Derating Curve

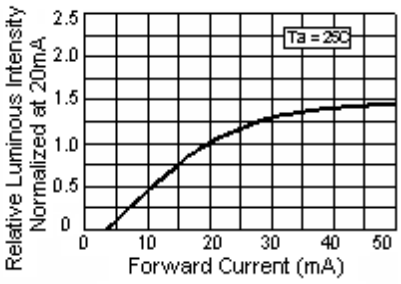

Fig.4 Relative Luminous Intensity vs. Forward Current

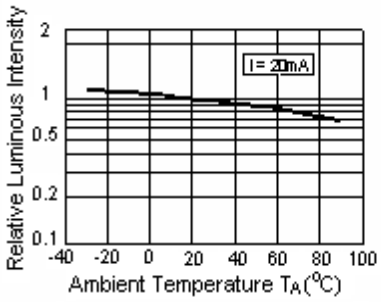

Fig.5 Luminous Intensity vs. AMbient Temperature

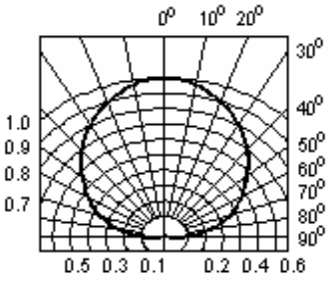

Fig.6 Spatial Distribution

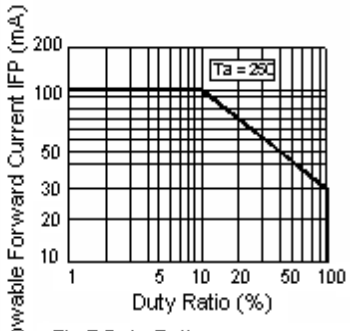

Fig.7 Duty Ratio vs. Allowable Forward Current

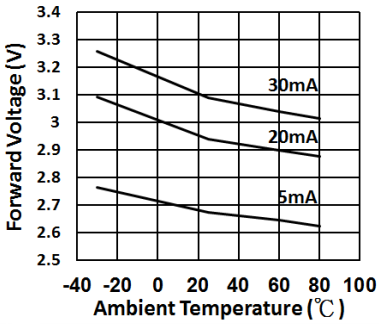

Fig.8 Ambient Temperature vs. Forward Voltage

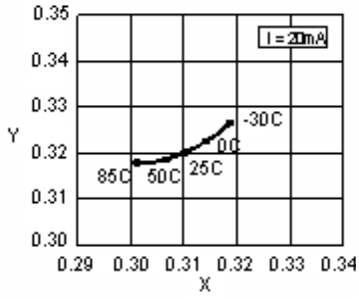

Fig.9 Ambient Temperature vs. Chromaticity Coordinate

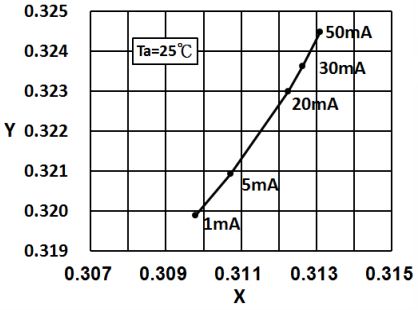

Fig.10 Forward Current vs. Chromaticity Coordinate

8. User Guide

Cleaning

Do not use unspecified chemical liquid to clean LED they could harm the package.

If cleaning is necessary, immerse the LED in ethyl alcohol or isopropyl alcohol at normal temperature for less than one minute.

Recommend Printed Circuit Board Attachment Pad

Infrared / vapor phase Reflow Soldering

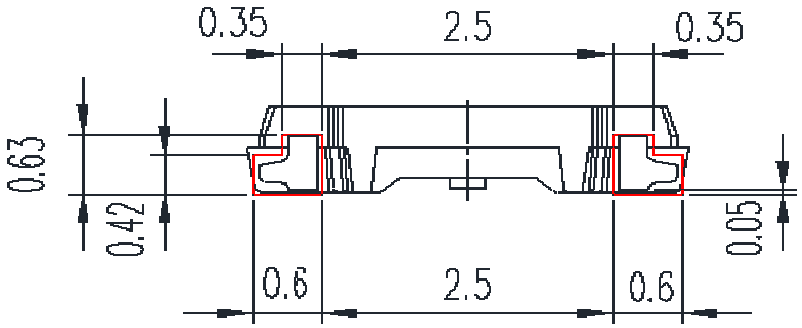

Package Dimensions of Tape

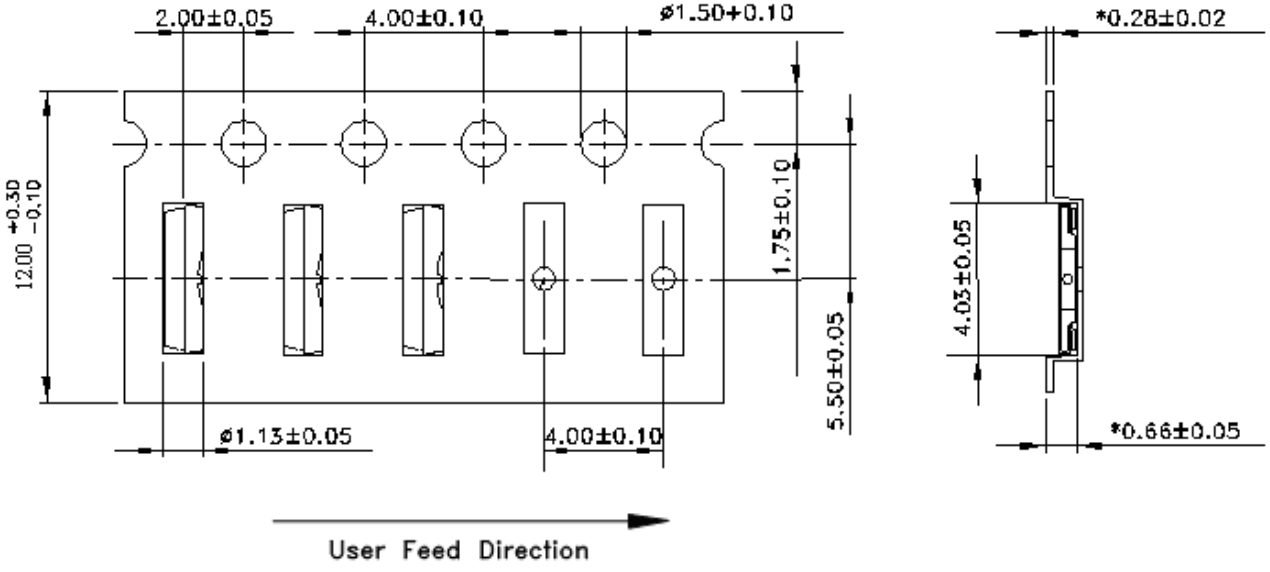

Note: All dimensions are in mm.

Package Dimensions of Reel

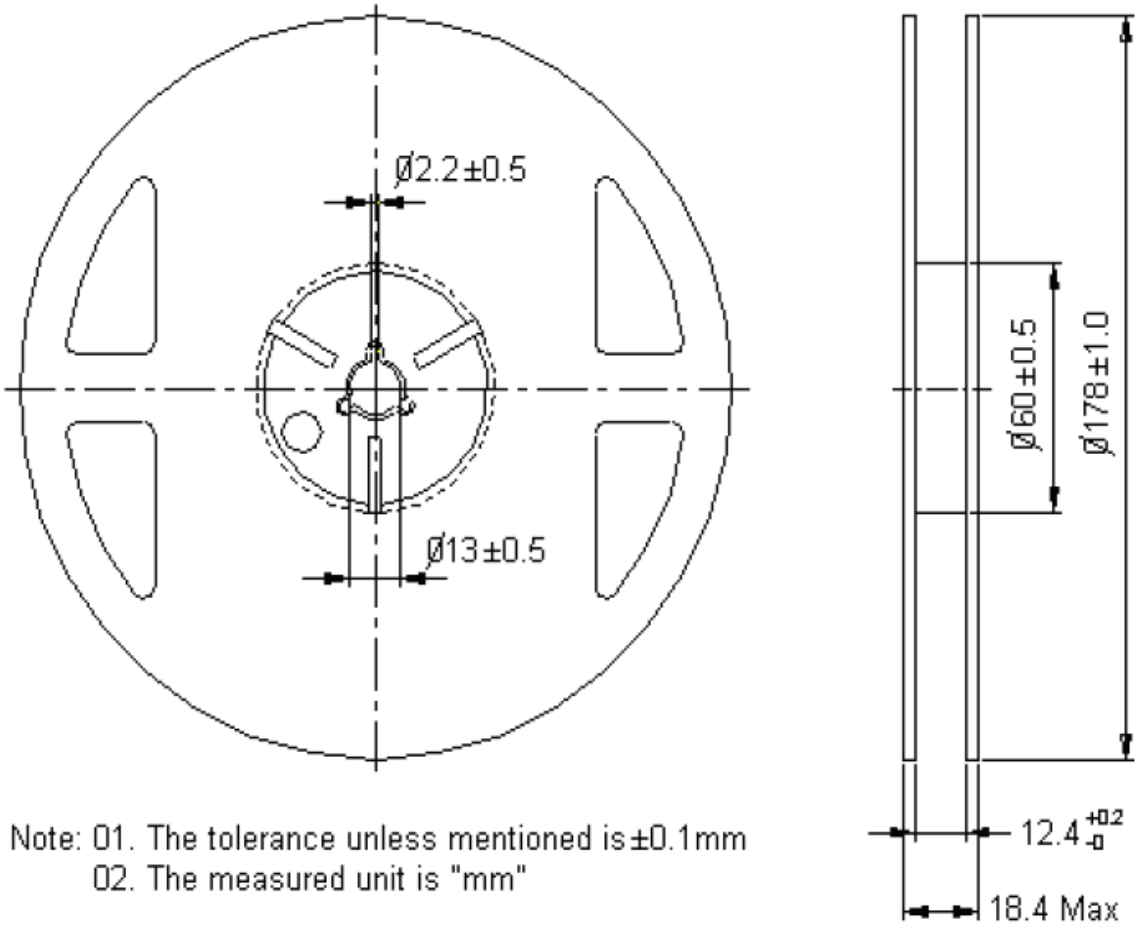

Note: 01. The tolerance unless mentioned is ±0.1mm
02. The measured unit is "mm"

Notes:

1. Empty component pockets sealed with top cover tape.
2. 7 inch reel- maximum 2000 pieces per reel.
3. The maximum number of consecutive missing lamps is two.
4. In accordance with EIA-481-1-B specifications.

9. CAUTIONS

1. Application

The LEDs described here are intended to be used for ordinary electronic equipment (such as office equipment, communication equipment and household applications).Consult Liteon's Sales in advance for information on applications in which exceptional reliability is required, particularly when the failure or malfunction of the LEDs may directly jeopardize life or health (such as in aviation, transportation, traffic control equipment, medical and life support systems and safety devices).

2. Storage

This product is qualified as Moisture sensitive Level 3 per JEDEC J-STD-020 Precaution when handing this moisture sensitive product is important to ensure the reliability of the product.

The package is sealed:

The LEDs should be stored at 30℃ or less and 90%RH or less. And the LEDs are limited to use within one year, while the LEDs is packed in moisture-proof package with the desiccants inside.

The package is opened:

The LEDs should be stored at 30℃ or less and 60%RH or less. Moreover, the LEDs are limited to solder process within 168hrs. If the Humidity Indicator shows the pink color in 10% even higher or exceed the storage limiting time since opened, that we recommended to baking LEDs at 60℃ at least 48hrs. To seal the remainder LEDs return to package, it's recommended to be with workable desiccants in original package.

3. Cleaning

Use alcohol-based cleaning solvents such as isopropyl alcohol to clean the LED if necessary.

4. Soldering

Recommended soldering conditions:

Reflow soldering		Soldering iron	
Pre-heat	150~200℃	Temperature	300℃ Max.
Pre-heat time	120 sec. Max.	Soldering time	3 sec. Max.
Soldering Temp. Soldering time	260℃ Max.		(one time only)
	30 sec. Max.		

5. Drive Method

An LED is a current-operated device. In order to ensure intensity uniformity on multiple LEDs connected in parallel in an application, it is recommended that a current limiting resistor be incorporated in the drive circuit, in series with each LED as shown in Circuit A below.

Circuit model A

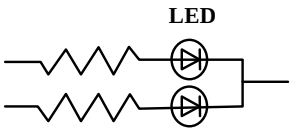

Circuit model B

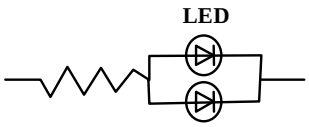

(A) Recommended circuit.

(B) The brightness of each LED might appear different due to the differences in the I-V characteristics of those LEDs.

6. ESD (Electrostatic Discharge)

Static Electricity or power surge will damage the LED.

Suggestions to prevent ESD damage:

- Use of a conductive wrist band or anti-Slectrostatic glove when handling these LEDs.
- All devices, equipment, and machinery must be properly grounded.
- Work tables, storage racks, etc. should be properly grounded.
- Use ion blower to neutralize the static charge which might have built up on surface of the LED's plastic lens as a result of friction between LEDs during storage and handling.

ESD-damaged LEDs will exhibit abnormal characteristics such as high reverse leakage current, low forward voltage, or " no lightup " at low currents.

To verify for ESD damage, check for " lightup " and Vf of the suspect LEDs at low currents.

7.1 Reliability Test

Test Item	Test Condition	Note	Number of Damaged
Solderability (Reflow Soldering)	Tsld=245±5℃, 3sec. (Lead Free Solder)	1 time Over 95%	0/30
Thermal Shock	-30℃ ~ 85℃ 30min. 30min.	100 cycles	0/30
High Temperature Storage	Ta=85℃	1000 hrs.	0/30
Temperature Humidity Storage	Ta=60℃, RH=90%	1000 hrs.	0/30
Steady State Operating Life	Ta=25℃, IF=20mA	1000 hrs.	0/30
Steady State Operating Life of High Temperature	Ta=85℃, IF=5mA	500 hrs.	0/30
Steady State Operating Life of High Humidity Heat	60℃, RH=90% , IF=15mA	500 hrs.	0/30
Steady State Operating Life of low Temperature	Ta=-30℃, IF=20mA	1000 hrs.	0/30

7.2 Criteria for Judging the Damage

Item	Symbol	Test Conditions	Criteria for Judgment	
			Min.	Max.
Forward Voltage	VF	IF=20mA	-	U.S.L. × 1.1
Luminous Intensity	IV	IF=20mA	U.S.L. × 0.7	-

8. Others

The appearance and specifications of the product may be modified for improvement without prior notice.

9. Suggested Checking List

Training and Certification

1. Everyone working in a static-safe area is ESD-certified?
2. Training records kept and re-certification dates monitored?

Static-Safe Workstation & Work Areas

1. Static-safe workstation or work-Sreas have ESD signs?
2. All surfaces and objects at all static-safe workstation and within 1 ft measure less than 100V?
3. All ionizer activated, positioned towards the units?
4. Each work surface mats grounding is good?

Personnel Grounding

1. Every person (including visitors) handling ESD sensitive (ESDS) items wear wrist strap, heel strap or conductive shoes with conductive flooring?
2. If conductive footwear used, conductive flooring also present where operator stand or walk?
3. Garments, hairs or anything closer than 1 ft to ESD items measure less than 100V*?
4. Every wrist strap or heel strap/conductive shoes checked daily and result recorded for all DLs?
5. All wrist strap or heel strap checkers calibration up to date?

   Note: *50V for Blue LED.

Device Handling

1. Every ESDS items identified by EIA-471 labels on item or packaging?
2. All ESDS items completely inside properly closed static-shielding containers when not at static-safe workstation?
3. No static charge generators (e.g. plastics) inside shielding containers with ESDS items?
4. All flexible conductive and dissipative package materials inspected before reuse or recycle?

Others

1. Audit result reported to entity ESD control coordinator?
2. Corrective action from previous audits completed?
3. Are audit records complete and on file?