EVERLIGHT ELECTRONICS CO., LTD.

Technical Data Sheet

Top View LEDs

67-21/GHC-AS2U1B17Z/2T



Features

- P-LCC-2 package.
- White package.
- Optical indicator.
- Colorless clear window.
- Wide viewing angle.
- Suitable for vapor-phase reflow, Infrared reflow and wave solder processes.
- Computable with automatic placement equipment.
- Available on tape and reel (8mm Tape).
- Pb-free.
- The product itself will remain within RoHS compliant version.

Descriptions

- The 67-21 series is available in soft orange, green,blue and yellow. Due to the package design, the LED has wide viewing angle and optimized light coupling by inter reflector. This feature makes the SMT TOP LED ideal for light pipe application. The low current requirement makes this device ideal for portable equipment or any other application where power is at a premium.

Applications

- Automotive: backlighting in dashboard and switch.
- Telecommunication: indicator and backlighting in telephone and fax.
- Flat backlight for LCD, switch and symbol.
- Light pipe application.
- General use.

Device Selection Guide

Chip Material	Emitted Color	Resin Color
InGaN	Brilliant Green	Water Clear

Technical Data Sheet

Top View LEDs

67-21/GHC-AS2U1B17Z/2T

Package Dimensions

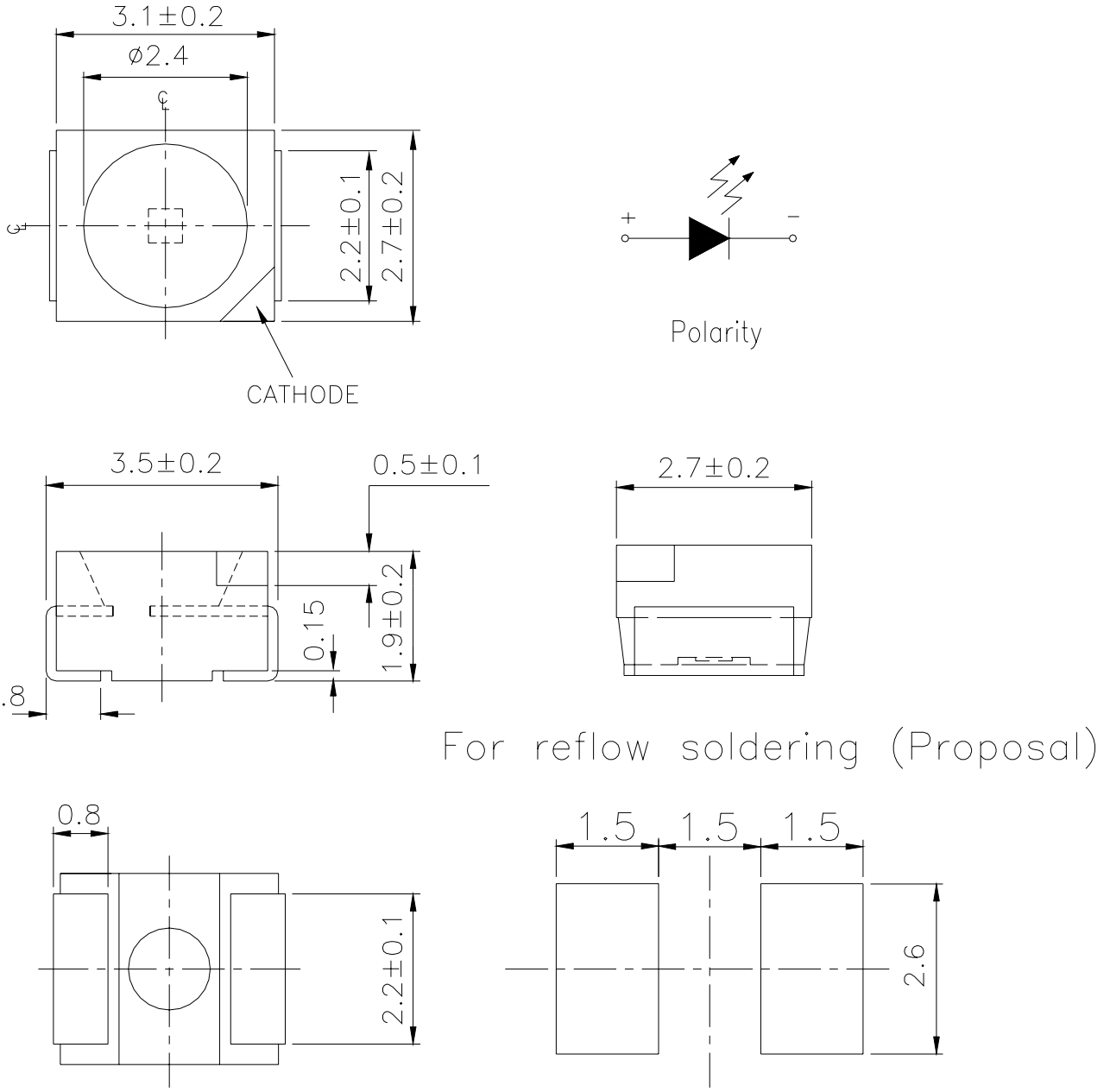

Note: The tolerances unless mentioned is ±0.1mm, Unit = mm

Technical Data Sheet

Top View LEDs

67-21/GHC-AS2U1B17Z/2T

Absolute Maximum Ratings (Ta=25℃)

Parameter	Symbol	Rating	Unit
Reverse Voltage	V_R	5	V
Forward Current	I_F	25	mA
Peak Forward Current (Duty 1/10 @1KHz)	I_{FP}	100	mA
Power Dissipation	Pd	95	mW
Electrostatic Discharge(HBM)	ESD	150	V
Operating Temperature	Topr	-40 ~ +85	℃
Storage Temperature	Tstg	-40 ~ +90	℃
Soldering Temperature	Tsol	Reflow Soldering : 260 ℃ for 10 sec. Hand Soldering : 350 ℃ for 3 sec.	

Electro-Optical Characteristics (Ta=25℃)

Parameter	Symbol	Min.	Typ.	Max.	Unit	Condition
Luminous Intensity	I_V	225	-----	565	mcd	I_F=10mA
Viewing Angle	2θ1/2	-----	120	-----	deg	I_F=10mA
Peak Wavelength	λp	-----	518	-----	nm	I_F=10mA
Dominant Wavelength	λd	517.5	-----	535.5	nm	I_F=10mA
Spectrum Radiation Bandwidth	△λ	-----	35	-----	nm	I_F=10mA
Forward Voltage	V_F	2.50	-----	3.50	V	I_F=10mA
Reverse Current	I_R	-----	-----	50	μA	V_R=5V

Notes:

1. Tolerance of Luminous Intensity: ±11%
2. Tolerance of Dominant Wavelength: ±1nm
3. Tolerance of Forward Voltage: ±0.1V

Technical Data Sheet

Top View LEDs

67-21/GHC-AS2U1B17Z/2T

Bin Range of Luminous Intensity

Bin Code	Min.	Max.	Unit	Conduction
S2	225	285	mcd	I_F=10mA
T1	285	360		
T2	360	450		
U1	450	565		

Bin Range of Dominant Wavelength

Group	Bin	Min	Max	Unit	Condition
A	B10	517.5	519.5	nm	I_F=10mA
	B11	519.5	521.5		
	B12	521.5	523.5		
	B13	523.5	525.5		
	B14	525.5	527.5		
	B15	527.5	529.5		
	B16	529.5	531.5		
	B17	531.5	533.5		
	B18	533.5	535.5		

Bin Range of Forward Voltage

Groups	Bin Code	Min.	Max.	Unit	Condition
B17	9	2.50	2.70	V	I_F=10mA
	10	2.70	2.90		
	11	2.90	3.10		
	12	3.10	3.30		
	13	3.30	3.50		

Notes:

1. Tolerance of Luminous Intensity: ±11%
2. Tolerance of Dominant Wavelength: ±1nm
3. Tolerance of Forward Voltage: ±0.1V

Technical Data Sheet

Top View LEDs

67-21/GHC-AS2U1B17Z/2T

Typical Electro-Optical Characteristics Curves

Spectrum Distribution

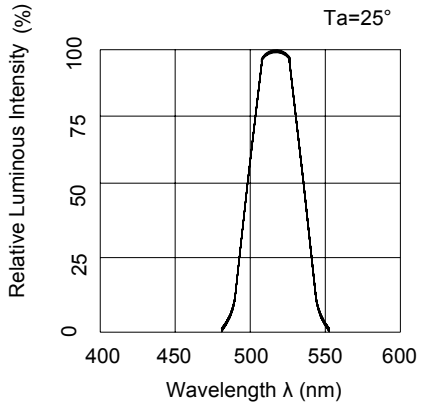

Forward Current vs. Forward Voltage

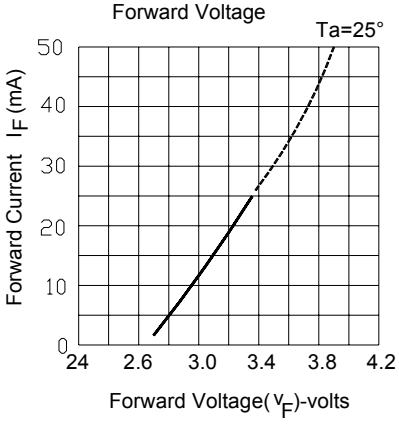

Relative Luminous Intensity vs. Ambient Temperature

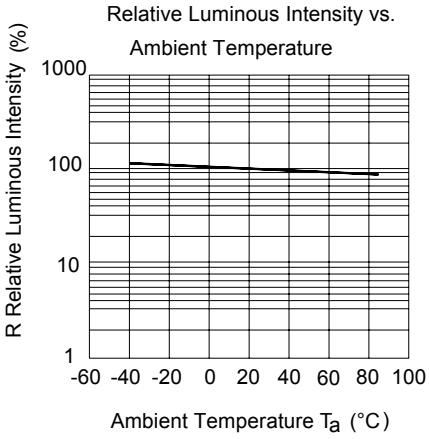

Relative Luminous Intensity vs Forward Current

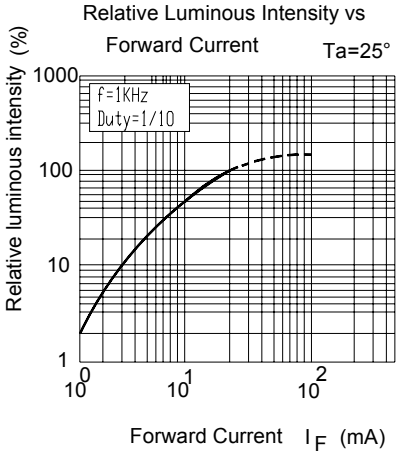

Forward Current Derating Curve

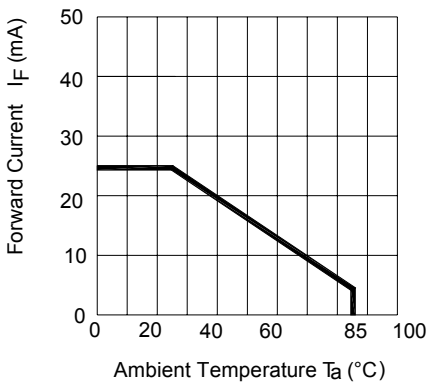

Radiation Diagram

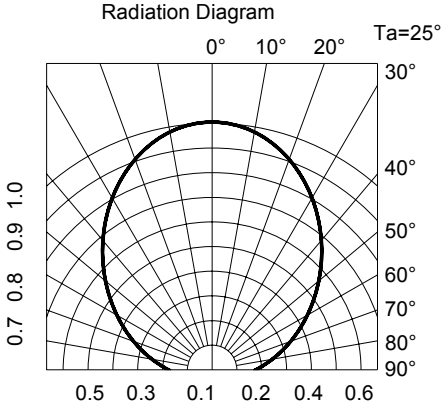

Technical Data Sheet

Top View LEDs

67-21/GHC-AS2U1B17Z/2T

Label Explanation

CAT: Luminous Intensity Rank

HUE: Dom. Wavelength Rank

REF: Forward Voltage Rank

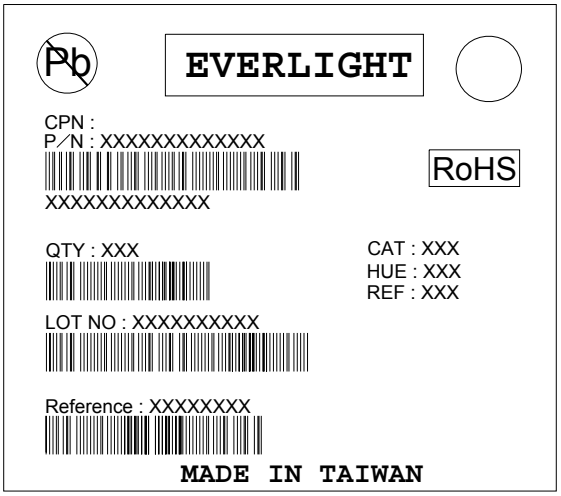

Reel Dimensions

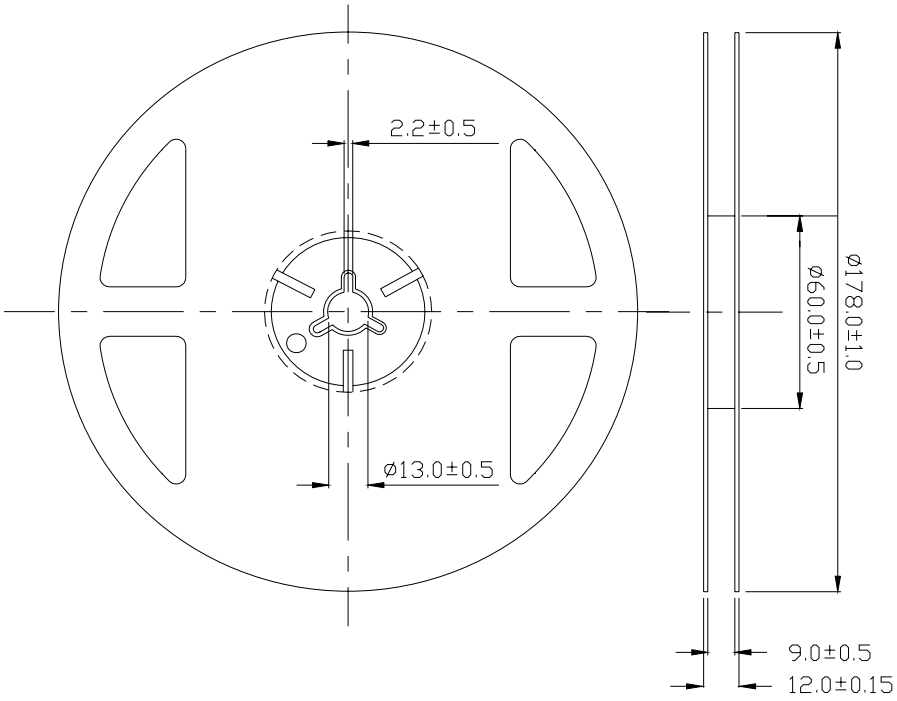

Note: Tolerances Unless Dimension ±0.1mm , Unit = mm

Technical Data Sheet

Top View LEDs

67-21/GHC-AS2U1B17Z/2T

Carrier Tape Dimensions: Loaded Quantity 2000 pcs Per Reel.

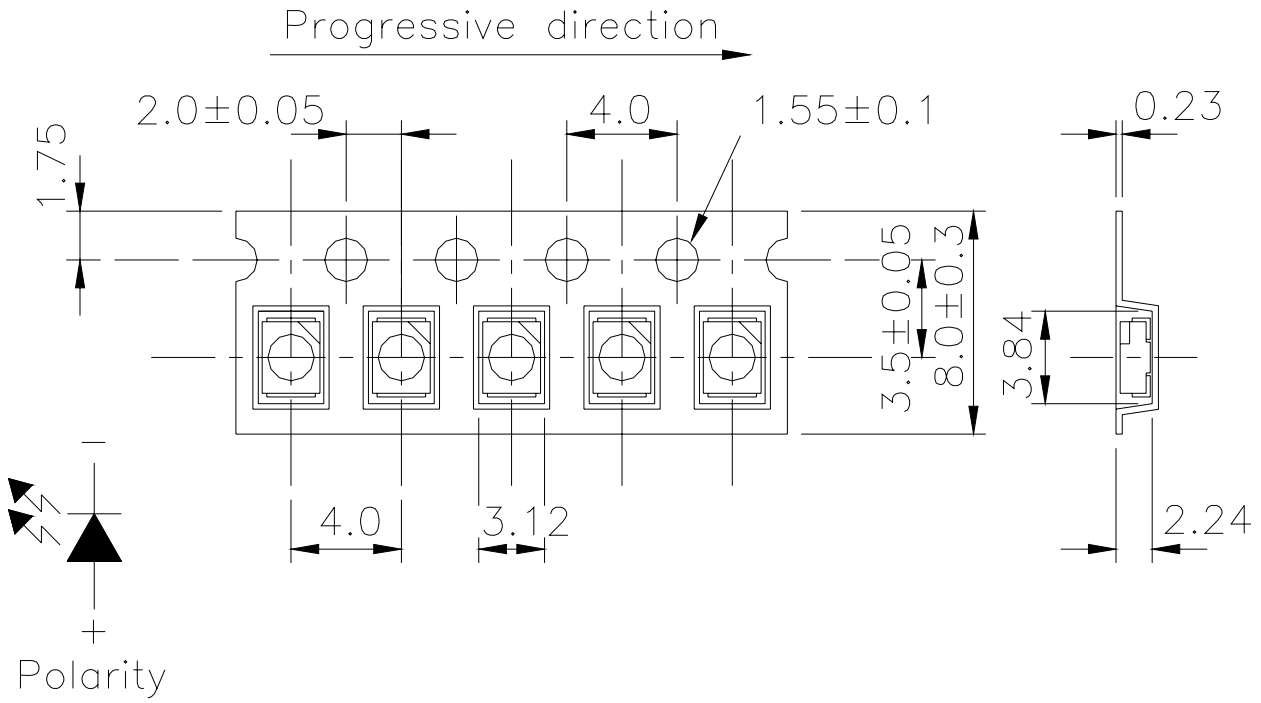

Note: Tolerances Unless Dimension ±0.1mm, Unit = mm

Moisture Resistant Packaging

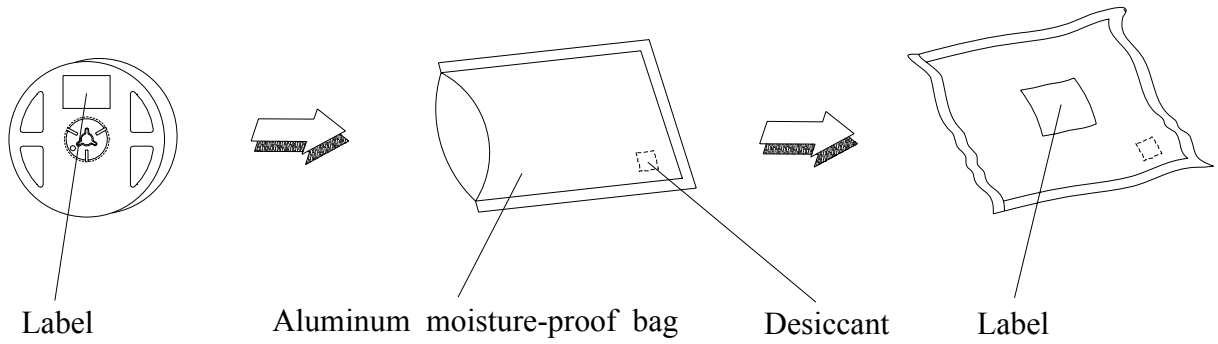

Technical Data Sheet

Top View LEDs

67-21/GHC-AS2U1B17Z/2T

Reliability Test Items and Conditions

The reliability of products shall be satisfied with items listed below.
Confidence level：90%
LTPD：10%

No.	Items	Test Condition	Test Hours/Cycles	Sample Size	Ac/Re
1	Reflow Soldering	Temp. : 260℃±5℃ Min. 5sec.	6 Min.	22 PCS.	0/1
2	Temperature Cycle	H : +100℃ 15min ∫ 5 min L : -40℃ 15min	300 Cycles	22 PCS.	0/1
3	Thermal Shock	H : +100℃ 5min ∫ 10 sec L : -10℃ 5min	300 Cycles	22 PCS.	0/1
4	High Temperature Storage	Temp. : 100℃	1000 Hrs.	22 PCS.	0/1
5	Low Temperature Storage	Temp. : -40℃	1000 Hrs.	22 PCS.	0/1
6	DC Operating Life	I_F = 20 mA	1000 Hrs.	22 PCS.	0/1
7	High Temperature / High Humidity	85℃/ 85%RH	1000 Hrs.	22 PCS.	0/1

Technical Data Sheet

Top View LEDs

67-21/GHC-AS2U1B17Z/2T

Precautions for Use

1. Over-current-proof

   Customer must apply resistors for protection, otherwise slight voltage shift will cause big current change (Burn out will happen).

2. Storage

   2.1 Do not open moisture proof bag before the products are ready to use.

   2.2 Before opening the package: The LEDs should be kept at 30℃ or less and 90%RH or less.

   2.3 After opening the package: The LED's floor life are 72 hours under 30℃ or less and 60% RH or less. If unused LEDs remain, it should be stored in moisture proof packages.

   2.4 If the moisture absorbent material (silica gel) has faded away or the LEDs have exceeded the storage time, baking treatment should be performed using the following conditions. Baking treatment : 60±5℃ for 24 hours.

3. Soldering Condition

   3.1 Pb-free solder temperature profile

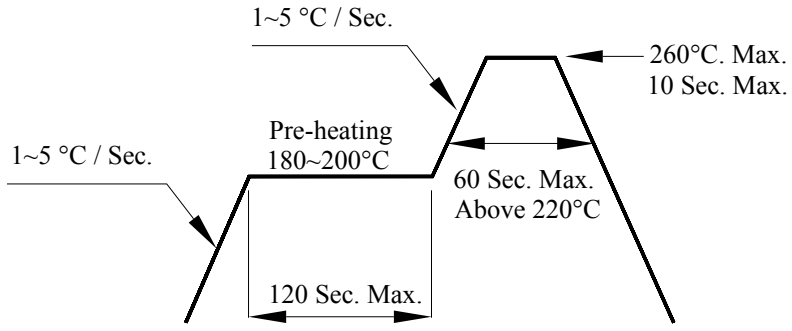

   3.2 Reflow soldering should not be done more than two times.

   3.3 When soldering, do not put stress on the LEDs during heating.

   3.4 After soldering, do not warp the circuit board.

4. Soldering Iron

Each terminal is to go to the tip of soldering iron temperature less than 350℃ for 3 seconds within once in less than the soldering iron capacity 25W. Leave two seconds and more intervals, and do soldering of each terminal. Be careful because the damage of the product is often started at the time of the hand solder.

5. Repairing

Repair should not be done after the LEDs have been soldered. When repairing is unavoidable, a double-head soldering iron should be used (as below figure). It should be confirmed beforehand whether the characteristics of the LEDs will or will not be damaged by repairing.

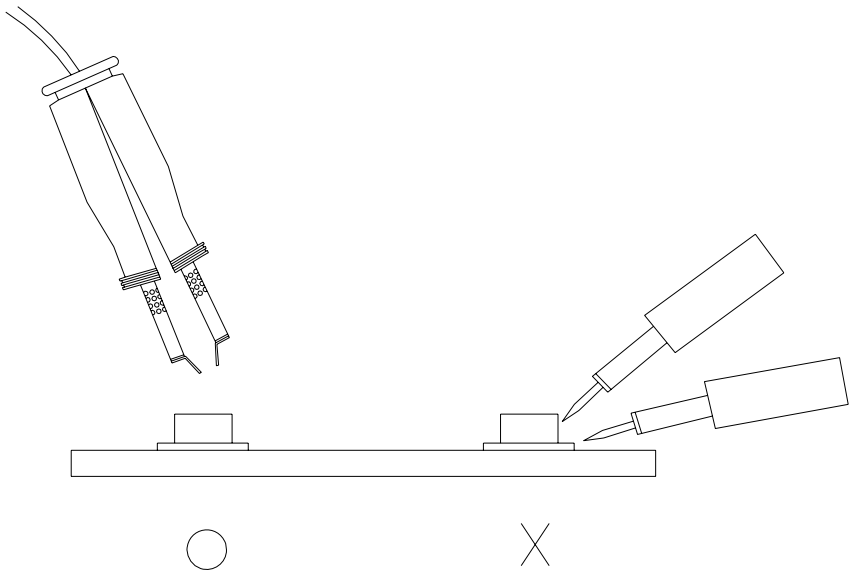

EVERLIGHT ELECTRONICS CO., LTD.
Office: No 25, Lane 76, Sec 3, Chung Yang Rd,
Tucheng, Taipei 236, Taiwan, R.O.C
Tel: 886-2-2267-2000, 2267-9936
Fax: 886-2267-6244, 2267-6189, 2267-6306
http://www.everlight.com