DATASHEET

SMD ▪ MID Power LED
67-21S/KK4C-HXXXXXXXX2833Z6/2T/EU

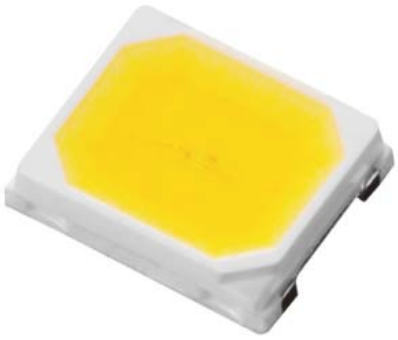

Features

- PLCC-2 package
- Top view white LED
- High luminous intensity output
- Wide viewing angle
- Pb-free
- RoHS compliant
- ANSI Binning

Description

The Everlight 67-21S package has high efficacy, high CRI, low power consumption, wide viewing angle and a compact form factor. These features make this package an ideal LED for all lighting applications.

Applications

- General lighting
- Decorative and Entertainment Lighting
- Indicators
- Illumination
- Switch lights

Copyright © 2016, Everlight All Rights Reserved. Release Date: 13.Dec. 2016. Issue No:V4

Ver.:4 Release Date:09/27/2022 狀態:Approved(正式發行)

Product Number Explanation

67–21S / K K 4 C – H XX XX XX XX XXXX Z6 / 2T/EU

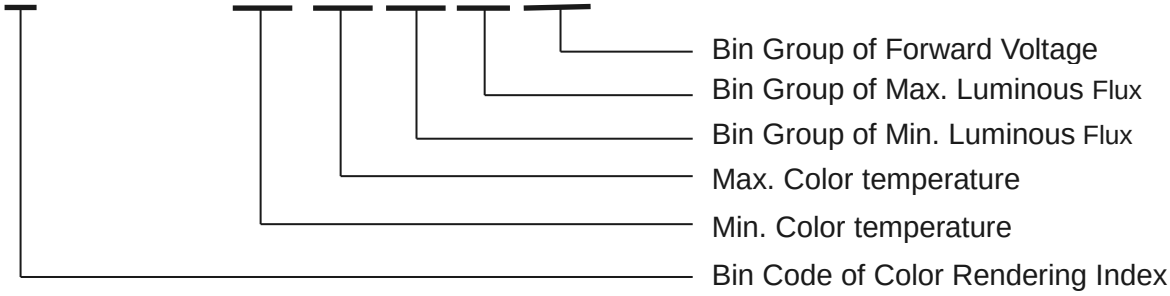

Table of Color Rendering Index

Symbol	Description
M	CRI(Min.) : 60
N	CRI(Min.) : 65
L	CRI(Min.) : 70
Q	CRI(Min.) : 75
K	CRI(Min.) : 80
P	CRI(Min.) : 85
H	CRI(Min.) : 90

Note:
Tolerance of Color Rendering Index: ±2

Table of Forward Current Index

Symbol	Description
Z6	I_F:60mA

Example:
67-21S/KK4C-H3030M42P32833Z6/2T/EU

CRI	80(Min.)
CCT	3000K
Flux	23~39lm
V_F	2.8~3.3V
I_F	60mA

Copyright © 2016, Everlight All Rights Reserved. Release Date: 13.Dec. 2016. Issue No:V4
Issue No:DSE-0013077 Ver.:4 Release Date:09/27/2022 狀態:Approved(正式發行)

Mass Production List

Product	CRI Min.(1)	CCT(K)	Φ(lm) Min. (2)	Φ(lm) Max. (2)
67-21S/KK4C-H2727M4N42833Z6/2T/EU	80	2700K	21	33
67-21S/KK4C-H3030M42P32833Z6/2T/EU	80	3000K	23	39
67-21S/KK4C-H3535M42P32833Z6/2T/EU	80	3500K	23	39
67-21S/KK4C-H4040N3P32833Z6/2T/EU	80	4000K	24	39
67-21S/KK4C-H5050N31P32833Z6/2T/EU	80	5000K	25	39
67-21S/KK4C-H5757N31P32833Z6/2T/EU	80	5700K	25	39
67-21S/KK4C-H6060N3P32833Z6/2T/EU	80	6000K	24	39
67-21S/KK4C-H6565N3P32833Z6/2T/EU	80	6500K	24	39

Notes:
1. Tolerance of Color Rendering Index: ±3
2. Tolerance of Luminous flux: ±11%.

EVERLIGHT

Copyright © 2016, Everlight All Rights Reserved. Release Date: 13.Dec. 2016. Issue No:V4

Ver.:4 Release Date:09/27/2022 狀態:Approved(正式發行)

Device Selection Guide

Chip Materials	Emitted Color	Resin Color
InGaN	Cool White Neutral White Warm White	Water Clear

Absolute Maximum Ratings ($T_{Soldering}$=25℃)

Parameter	Symbol	Rating	Unit
Forward Current	I_F	75	mA
Peak Forward Current (Duty 1/10 @10ms)	I_{FP}	100	mA
Power Dissipation	P_d	250	mW
Operating Temperature	T_{opr}	-40 ~ +85	℃
Storage Temperature	T_{stg}	-40 ~ +100	℃
Thermal Resistance (Junction / Soldering point)	$R_{th\ J\text{-}S}$	50	℃/W
Junction Temperature	T_j	125	℃
Soldering Temperature	T_{sol}	Reflow Soldering : 260 ℃ for 10 sec. Hand Soldering : 350 ℃ for 3 sec.	

Note:
The products are sensitive to static electricity and must be carefully taken when handling products

Electro-Optical Characteristics ($T_{Soldering}$=25℃)

Parameter	Symbol	Min.	Typ.	Max.	Unit	Condition
Luminous Flux(1)	Φ	21	-----	39	lm	I_F=60mA
Forward Voltage(2)	V_F	2.8	-----	3.3	V	I_F=60mA
Color Rendering Index(3)	Ra	80	-----	-----		I_F=60mA
Viewing Angle	$2\theta_{1/2}$	-----	120	-----	deg	I_F=60mA
Reverse Current	I_R	-----	-----	50	μA	V_R =5V

Notes:
1. Tolerance of Luminous flux: ±11%.
2. Tolerance of Forward Voltage: ±0.1V.
3. Tolerance of Color Rendering Index: ±3

Copyright © 2016, Everlight All Rights Reserved. Release Date: 13.Dec. 2016. Issue No:V4

Ver.:4 Release Date:09/27/2022 狀態:Approved(正式發行)

Bin Range of Luminous Flux

Bin Code	Min.	Max.	Unit	Condition
M4	21	24	lm	I_F=60mA
M42	23	24		
N3	24	27		
N31	25	27		
N4	27	33		
P3	33	39		

Note:
Tolerance of Luminous flux: ±11%.

Bin Range of Forward Voltage

Group	Bin Code	Min.	Max.	Unit	Condition
2833	35	2.8	2.9	V	I_F=60mA
	36	2.9	3.0		
	37	3.0	3.1		
	38	3.1	3.2		
	39	3.2	3.3		

Note:
Tolerance of Forward Voltage: ±0.1V.

Copyright © 2016, Everlight All Rights Reserved. Release Date: 13.Dec. 2016. Issue No:V4

Ver.:4 Release Date:09/27/2022 狀態:Approved(正式發行)

The C.I.E. 1931 Chromaticity Diagram

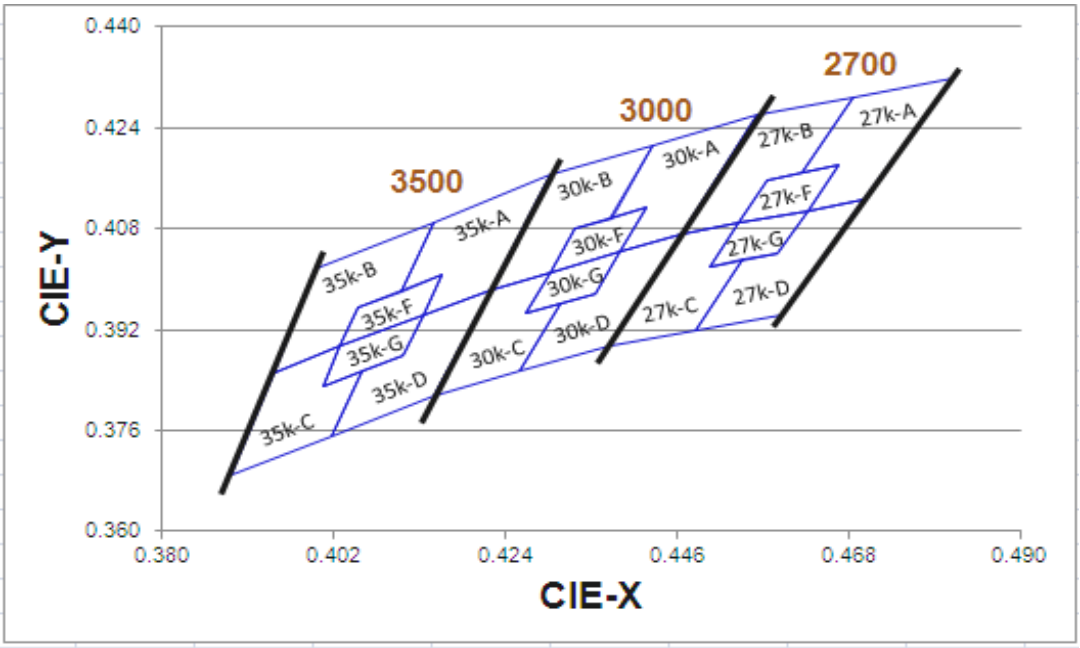

Bin Range of Chromaticity Coordinates

CCT	Bin Code	CIE_x	CIE_y	Bin Code	CIE_x	CIE_y
2700K	27K-A	0.4813	0.4319	27K-D	0.4700	0.4126
		0.4687	0.4289		0.4627	0.4109
		0.4621	0.4169		0.4588	0.4041
		0.4667	0.4180		0.4544	0.4030
		0.4627	0.4109		0.4483	0.3919
		0.4700	0.4126		0.4593	0.3944
	Reference Range:2580K~2700K					
	27K-B	0.4687	0.4289	27K-C	0.4465	0.4071
		0.4562	0.4260		0.4373	0.3893
		0.4465	0.4071		0.4483	0.3919
		0.4539	0.4088		0.4544	0.4030
		0.4576	0.4158		0.4502	0.4020
		0.4621	0.4169		0.4539	0.4088
	Reference Range:2700K~2870K					
	27K-F	0.4667	0.4180	27K-G	0.4627	0.4109
		0.4576	0.4158		0.4539	0.4088
		0.4539	0.4088		0.4502	0.4020
		0.4627	0.4109		0.4588	0.4041
	Reference Range: 2665K~2770K					

Copyright © 2016, Everlight All Rights Reserved. Release Date: 13.Dec. 2016. Issue No:V4

Ver.:4 Release Date:09/27/2022 狀態:Approved(正式發行)

CCT	Bin Code	CIE_x	CIE_y	Bin Code	CIE_x	CIE_y
3000K	30K-A	0.4562	0.4260	30K-D	0.4465	0.4071
		0.4430	0.4212		0.4388	0.4043
		0.4375	0.4096		0.4355	0.3977
		0.4422	0.4113		0.4311	0.3962
		0.4388	0.4043		0.4259	0.3853
		0.4465	0.4071		0.4373	0.3893
	Reference Range:2870K~3000K					
	30K-B	0.4430	0.4212	30K-C	0.4221	0.3984
		0.4299	0.4165		0.4147	0.3814
		0.4221	0.3984		0.4259	0.3853
		0.4297	0.4011		0.4311	0.3962
		0.4328	0.4079		0.4267	0.3946
		0.4375	0.4096		0.4297	0.4011
	Reference Range:3000K~3220K					
	30K-F	0.4422	0.4113	30K-G	0.4388	0.4043
		0.4328	0.4079		0.4297	0.4011
		0.4297	0.4011		0.4267	0.3946
		0.4388	0.4043		0.4355	0.3977
	Reference Range:2960K~3080K					

CCT	Bin Code	CIE_x	CIE_y	Bin Code	CIE_x	CIE_y
3500K	35K-A	0.4299	0.4165	35K-D	0.4221	0.3984
		0.4148	0.4090		0.4134	0.3943
		0.4106	0.3981		0.4108	0.3878
		0.4159	0.4007		0.4057	0.3853
		0.4134	0.3943		0.4018	0.3752
		0.4221	0.3984		0.4147	0.3814
	Reference Range:3220K~3500K					
	35K-B	0.4148	0.4090	35K-C	0.3943	0.3853
		0.3996	0.4015		0.3889	0.3690
		0.3943	0.3853		0.4018	0.3752
		0.4029	0.3893		0.4057	0.3853
		0.4051	0.3954		0.4006	0.3829
		0.4106	0.3981		0.4029	0.3893
	Reference Range:3500K~3710K					
	35K-F	0.4159	0.4007	35K-G	0.4134	0.3943
		0.4051	0.3954		0.4029	0.3893
		0.4029	0.3893		0.4006	0.3829
		0.4134	0.3943		0.4108	0.3878
	Reference Range:3360K~3540K					

Copyright © 2016, Everlight All Rights Reserved. Release Date: 13.Dec. 2016. Issue No:V4

Ver.:4 Release Date:09/27/2022 狀態:Approved(正式發行)

The C.I.E. 1931 Chromaticity Diagram

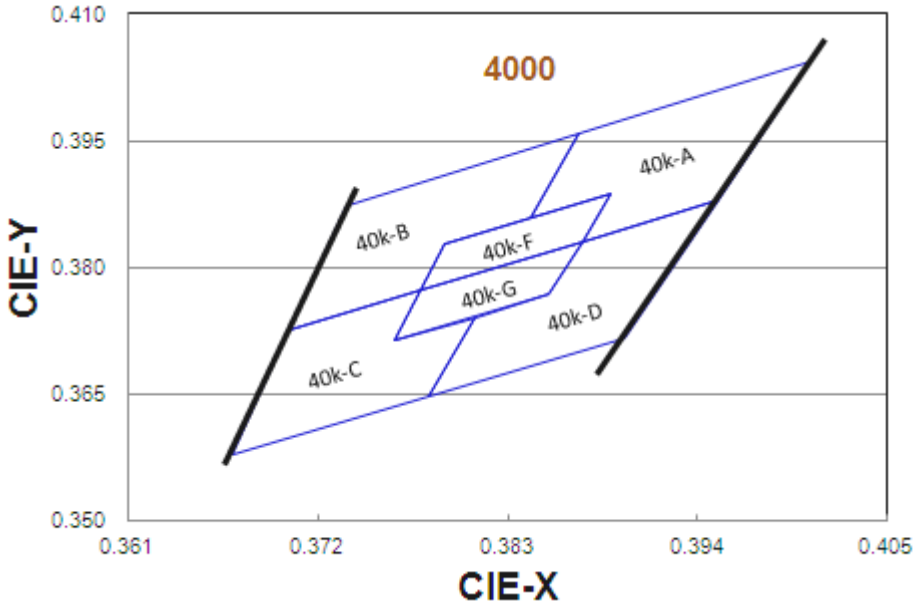

Bin Range of Chromaticity Coordinates

CCT	Bin Code	CIE_x	CIE_y	Bin Code	CIE_x	CIE_y
4000K	40K-A	0.4006	0.4044	40K-D	0.3952	0.3880
		0.3871	0.3959		0.3873	0.3831
		0.3843	0.3858		0.3854	0.3768
		0.3890	0.3887		0.3810	0.3741
		0.3873	0.3831		0.3784	0.3647
		0.3952	0.3880		0.3898	0.3716
	Reference Range:3700K~3970K					
	40K-B	0.3871	0.3959	40K-C	0.3703	0.3726
		0.3736	0.3874		0.3670	0.3578
		0.3703	0.3726		0.3784	0.3647
		0.3779	0.3773		0.3810	0.3741
		0.3793	0.3828		0.3764	0.3713
		0.3843	0.3858		0.3779	0.3773
	Reference Range:3970K~4270K					
	40K-F	0.3890	0.3887	40K-G	0.3873	0.3831
		0.3793	0.3828		0.3779	0.3773
		0.3779	0.3773		0.3764	0.3713
		0.3873	0.3831		0.3854	0.3768
	Reference Range:3870K~4080K					

Copyright © 2016, Everlight All Rights Reserved. Release Date: 13.Dec. 2016. Issue No:V4
Issue No:DSE-0013077 Ver.:4 Release Date:09/27/2022 狀態:Approved(正式發行)

The C.I.E. 1931 Chromaticity Diagram

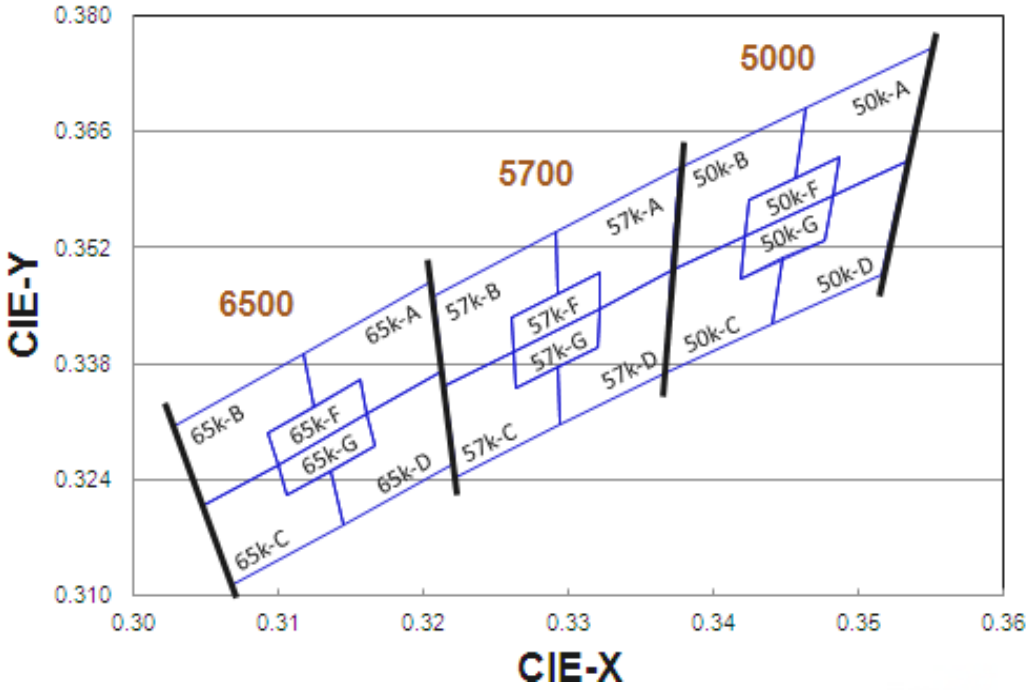

Bin Range of Chromaticity Coordinates

CCT	Bin Code	CIE_x	CIE_y	Bin Code	CIE_x	CIE_y
5000K	50K-A	0.3551	0.3760	50K-D	0.3533	0.3624
		0.3464	0.3688		0.3482	0.3583
		0.3456	0.3604		0.3477	0.3530
		0.3487	0.3629		0.3448	0.3507
		0.3482	0.3583		0.3441	0.3428
		0.3533	0.3624		0.3515	0.3487
	Reference Range:4745K~5000K					
	50K-B	0.3464	0.3688	50K-C	0.3371	0.3493
		0.3376	0.3616		0.3366	0.3369
		0.3371	0.3493		0.3441	0.3428
		0.3422	0.3533		0.3448	0.3507
		0.3425	0.3579		0.3418	0.3483
		0.3456	0.3604		0.3422	0.3533
	Reference Range:5000K~5310K					
	50K-F	0.3487	0.3629	50K-G	0.3482	0.3583
		0.3425	0.3579		0.3422	0.3533
		0.3422	0.3533		0.3418	0.3483
		0.3482	0.3583		0.3477	0.3530
	Reference Range:4910K~5120K					

Copyright © 2016, Everlight All Rights Reserved. Release Date: 13.Dec. 2016. Issue No:V4

Ver.:4 Release Date:09/27/2022 狀態:Approved(正式發行)

CCT	Bin Code	CIE_x	CIE_y	Bin Code	CIE_x	CIE_y
5700K	57K-A	0.3376	0.3616	57K-D	0.3371	0.3493
		0.3292	0.3539		0.3321	0.3447
		0.3292	0.3464		0.3320	0.3401
		0.3321	0.3490		0.3293	0.3377
		0.3321	0.3447		0.3294	0.3306
		0.3371	0.3493		0.3366	0.3369
	Reference Range:5310K~5700K					
	57K-B	0.3292	0.3539	57K-C	0.3215	0.3353
		0.3207	0.3462		0.3222	0.3243
		0.3215	0.3353		0.3294	0.3306
		0.3262	0.3395		0.3293	0.3377
		0.3261	0.3436		0.3263	0.335
		0.3292	0.3464		0.3262	0.3395
	Reference Range:5700K~6020K					
	57K-F	0.3321	0.3490	57K-G	0.3321	0.3447
		0.3261	0.3436		0.3262	0.3395
		0.3262	0.3395		0.3263	0.3350
		0.3321	0.3447		0.3320	0.3401
	Reference Range:5520K~5780K					

CCT	Bin Code	CIE_x	CIE_y	Bin Code	CIE_x	CIE_y
6500K	65K-A	0.3205	0.3481	65K-D	0.3213	0.3371
		0.3117	0.3393		0.3161	0.3320
		0.3125	0.3328		0.3166	0.3281
		0.3157	0.3360		0.3136	0.3251
		0.3161	0.3320		0.3145	0.3187
		0.3213	0.3371		0.3221	0.3261
	Reference Range:6020K~6500K					
	65K-B	0.3117	0.3393	65K-C	0.3048	0.3209
		0.3028	0.3304		0.3068	0.3113
		0.3048	0.3209		0.3145	0.3187
		0.3100	0.3259		0.3136	0.3251
		0.3093	0.3297		0.3106	0.3222
		0.3125	0.3328		0.31	0.3259
	Reference Range:6500K~7050K					
	65K-F	0.3157	0.3360	65K-G	0.3161	0.3320
		0.3093	0.3297		0.3100	0.3259
		0.3100	0.3259		0.3106	0.3222
		0.3161	0.3320		0.3166	0.3281
	Reference Range:6300K~6690K					

Copyright © 2016, Everlight All Rights Reserved. Release Date: 13.Dec. 2016. Issue No:V4

Ver.:4 Release Date:09/27/2022 狀態:Approved(正式發行)

The C.I.E. 1931 Chromaticity Diagram

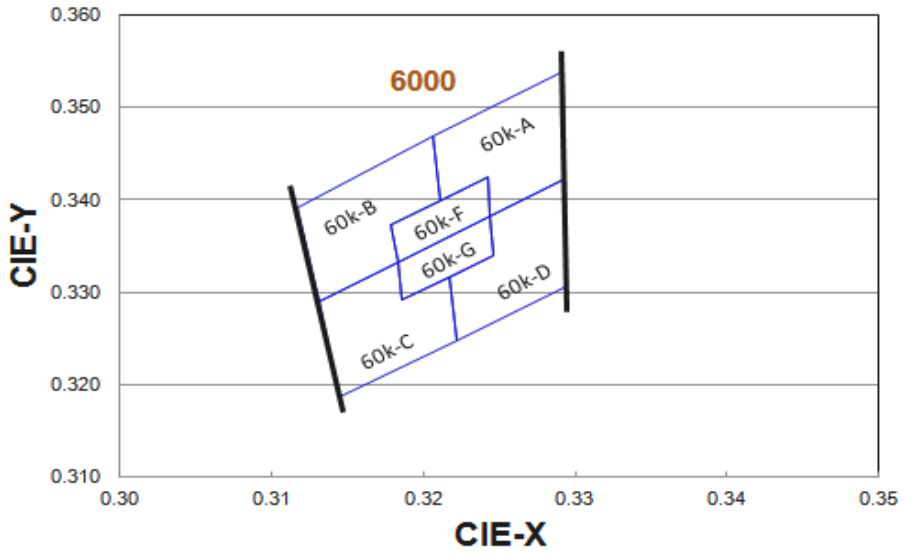

Bin Range of Chromaticity Coordinates

CCT	Bin Code	CIE_x	CIE_y	Bin Code	CIE_x	CIE_y
6000K	60K-A	0.3292	0.3539	60K-D	0.3293	0.3423
		0.3206	0.3468		0.3244	0.3382
		0.3211	0.3399		0.3246	0.3340
		0.3242	0.3424		0.3217	0.3317
		0.3244	0.3382		0.3222	0.3248
		0.3293	0.3423		0.3294	0.3306
	Reference Range:5700K~6020K					
	60K-B	0.3206	0.3468	60K-C	0.3131	0.3290
		0.3117	0.3392		0.3145	0.3187
		0.3131	0.3290		0.3222	0.3248
		0.3183	0.3332		0.3217	0.3317
		0.3179	0.3373		0.3186	0.3292
		0.3211	0.3399		0.3183	0.3332
	Reference Range:6020K~6500K					
	60K-F	0.3242	0.3424	60K-G	0.3244	0.3382
		0.3179	0.3373		0.3183	0.3332
		0.3183	0.3332		0.3186	0.3292
		0.3244	0.3382		0.3246	0.3340
	Reference Range: 5870K~6190K					

Notes:
1. The value is based on driving current by 60mA.

2. Tolerance of Chromaticity Coordinates: ±0.01.

Copyright © 2016, Everlight All Rights Reserved. Release Date: 13.Dec. 2016. Issue No:V4
Issue No:DSE-0013077 Ver.:4 Release Date:09/27/2022 狀態:Approved(正式發行)

Spectrum Distribution

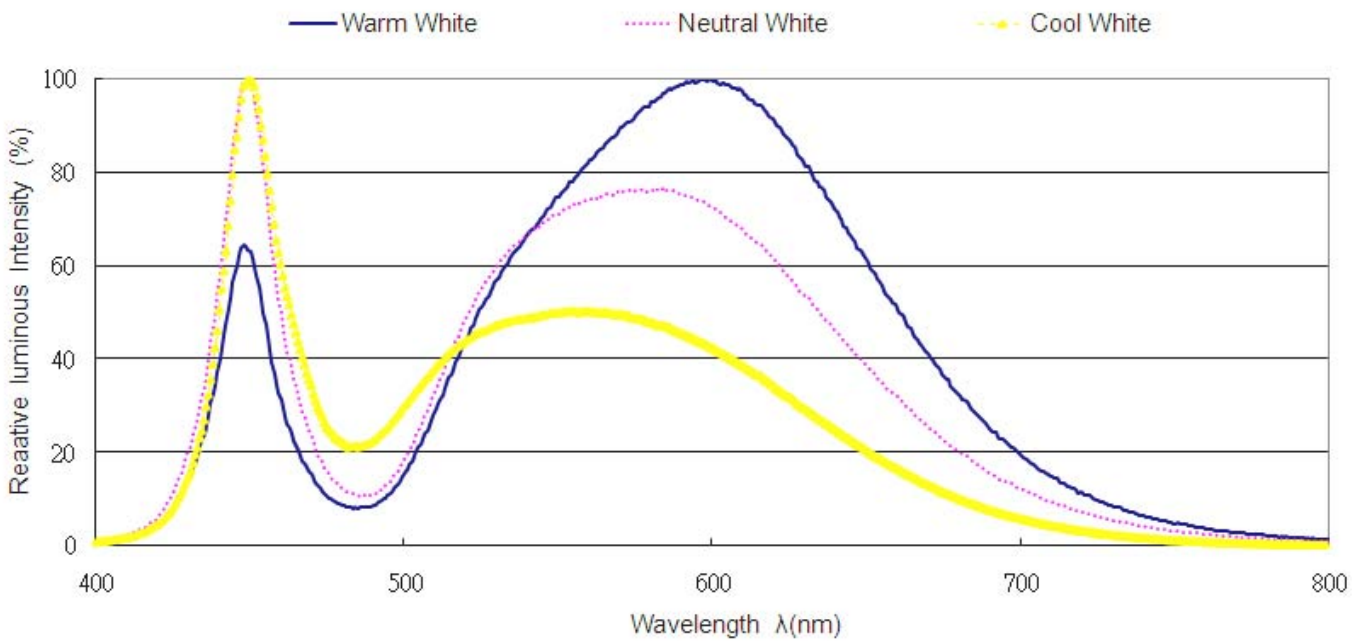

Typical Electro-Optical Characteristics Curves

Fig.1 – Forward Voltage Shift vs. Junction Temperature

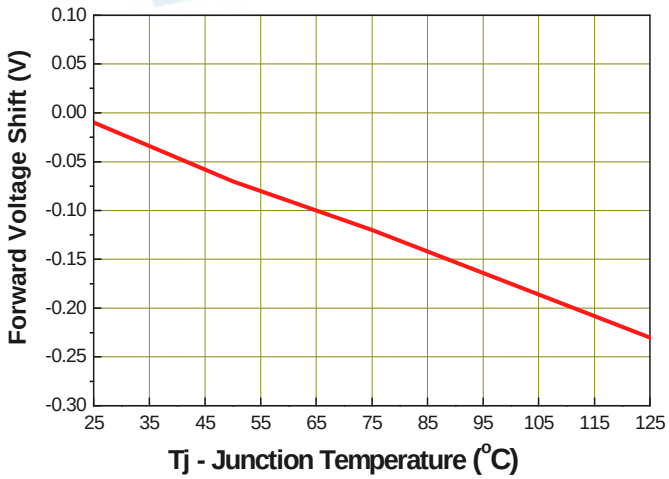

Fig.2 - Relative Luminous Intensity vs. Forward Current

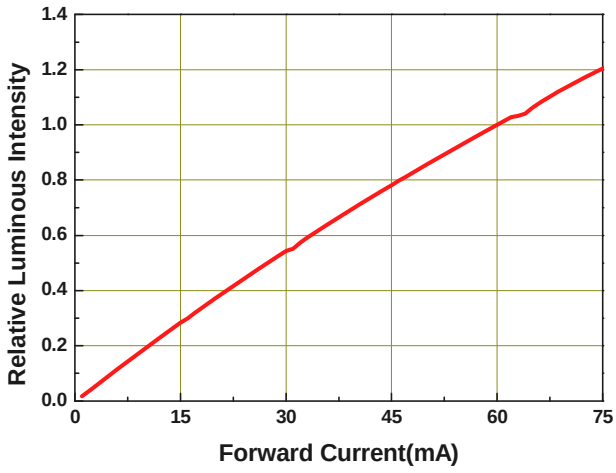

Copyright © 2016, Everlight All Rights Reserved. Release Date: 13.Dec. 2016. Issue No:V4
Issue No:DSE-0013077 Ver.:4 Release Date:09/27/2022 狀態:Approved(正式發行)

Typical Electro-Optical Characteristics Curves

Fig.3 - Relative Luminous Intensity vs. Junction Temperature

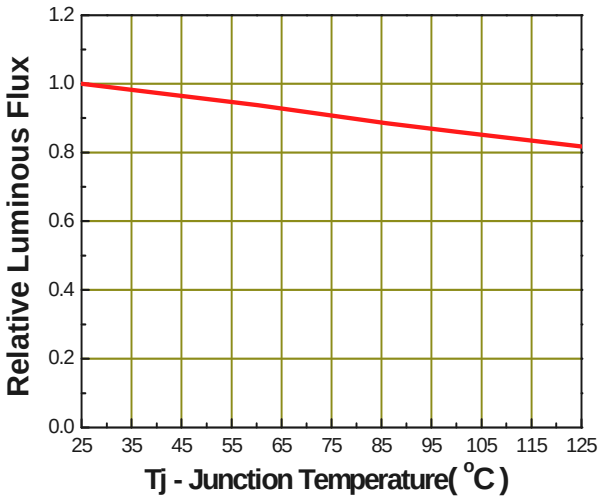

Fig.4 - Forward Current vs. Forward Voltage

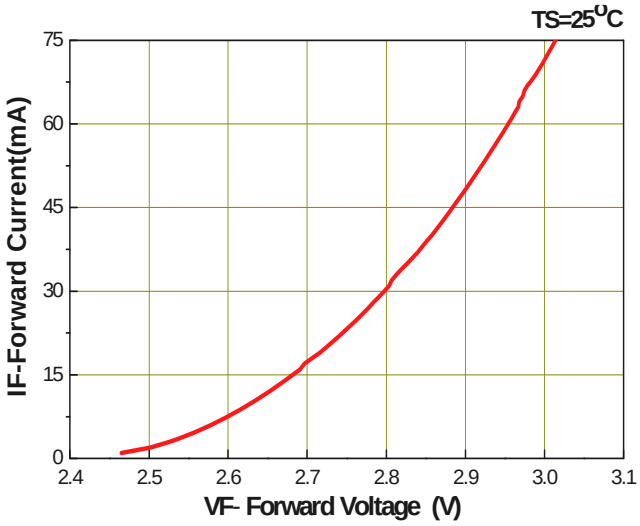

Fig.5 – Max. Driving Forward Current vs. Soldering Temperature

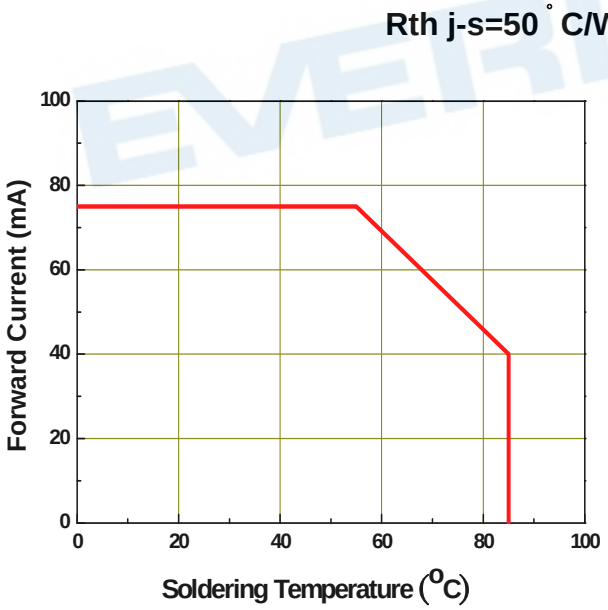

Fig.6 – Radiation Diagram

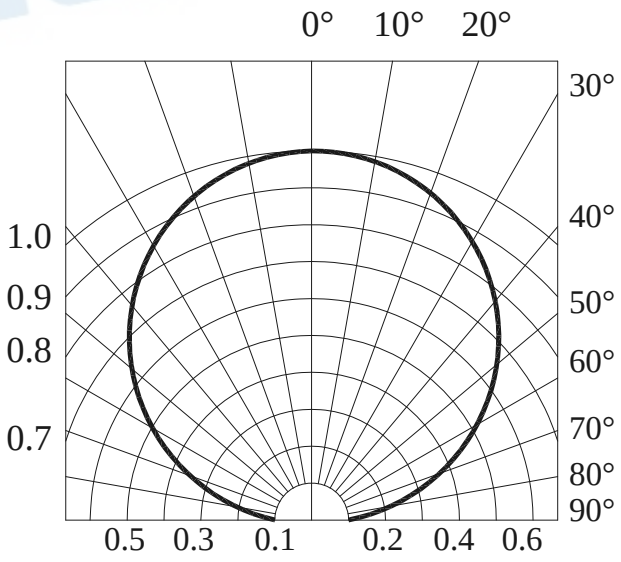

Copyright © 2016, Everlight All Rights Reserved. Release Date: 13.Dec. 2016. Issue No:V4
Issue No:DSE-0013077 Ver.:4 Release Date:09/27/2022 狀態:Approved(正式發行)

Package Dimension

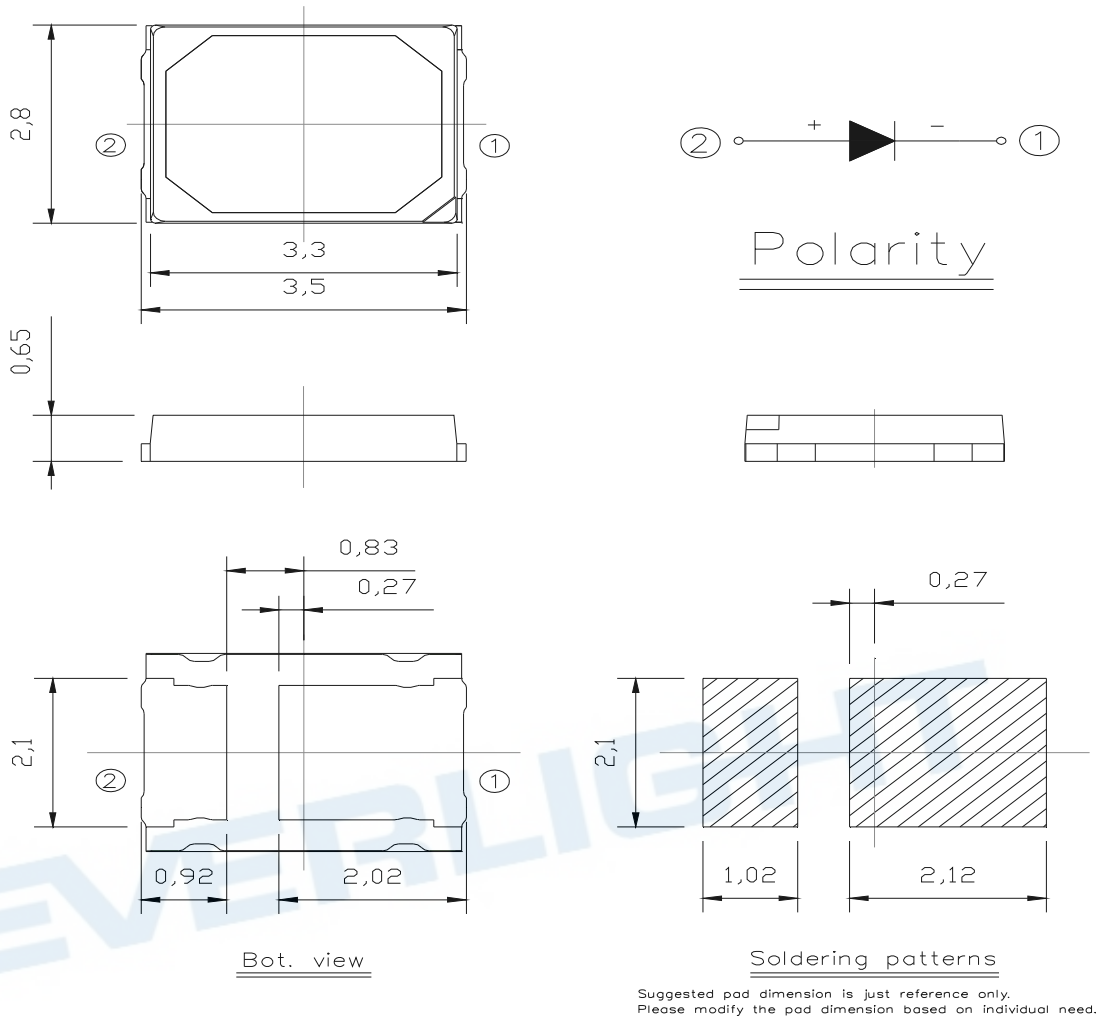

Note:
Tolerance unless mentioned is ±0.15 mm; Unit = mm

Copyright © 2016, Everlight All Rights Reserved. Release Date: 13.Dec. 2016. Issue No:V4
Issue No:DSE-0013077 Ver.:4 Release Date:09/27/2022 狀態:Approved(正式發行)

Moisture Resistant Packing Materials

Label Explanation

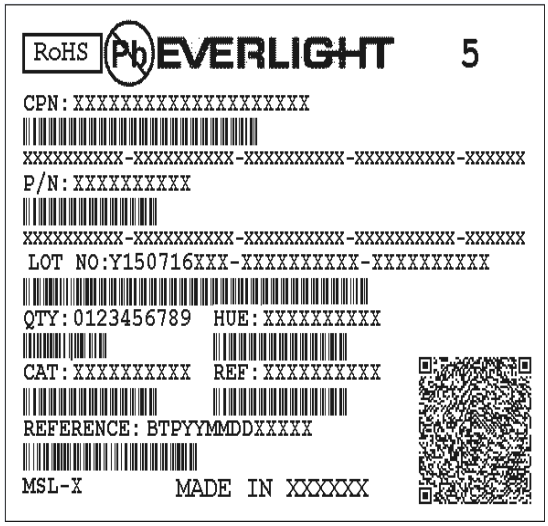

- CPN: Customer's Product Number
- P/N: Product Number
- QTY: Packing Quantity
- CAT: Luminous Intensity Rank
- HUE: Dom. Wavelength Rank
- REF: Forward Voltage Rank
- LOT No: Lot Number

Reel Dimensions

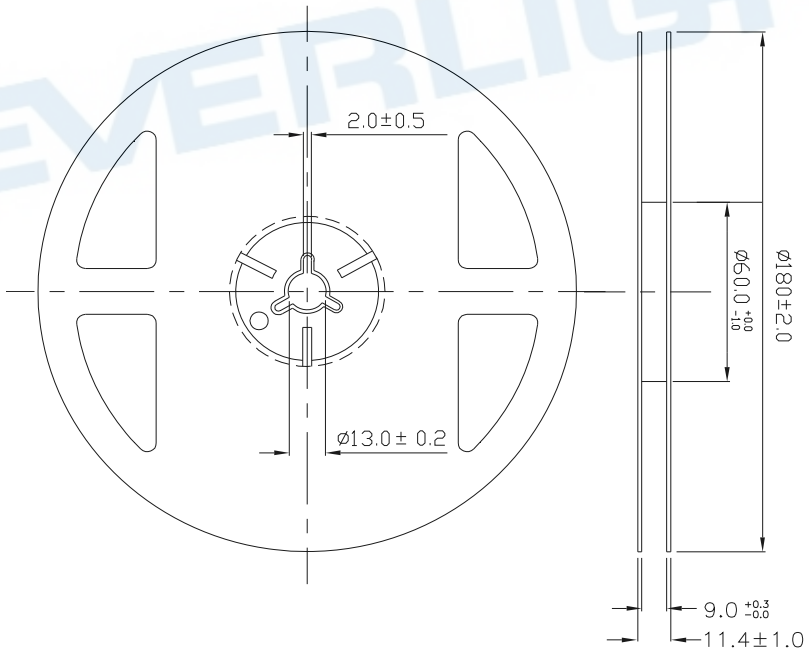

Note:
Tolerances unless mentioned ±0.1mm. Unit = mm

Copyright © 2016, Everlight All Rights Reserved. Release Date: 13.Dec. 2016. Issue No:V4

Ver.:4 Release Date:09/27/2022 狀態:Approved(正式發行)

Carrier Tape Dimensions: Loaded Quantity 4000pcs Per Reel

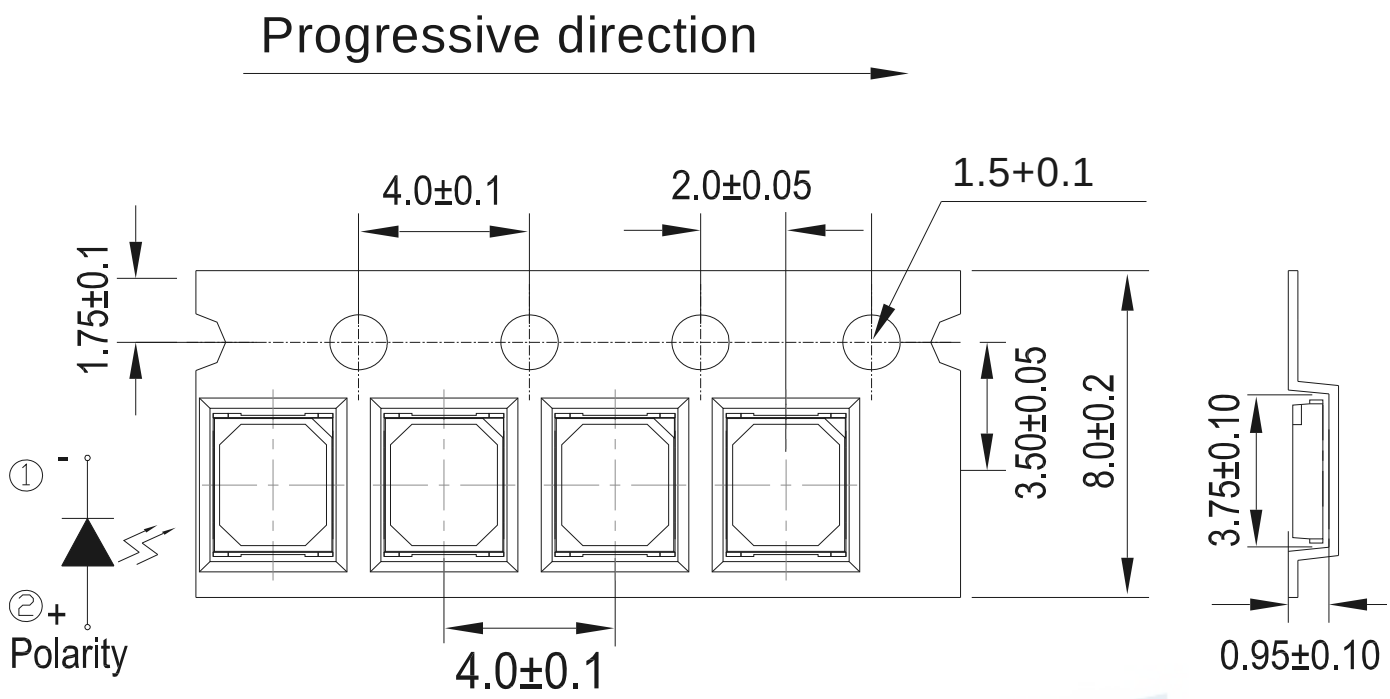

Note:
1.Tolerance unless mentioned is ±0.1mm; Unit = mm

Moisture Resistant Packing Process

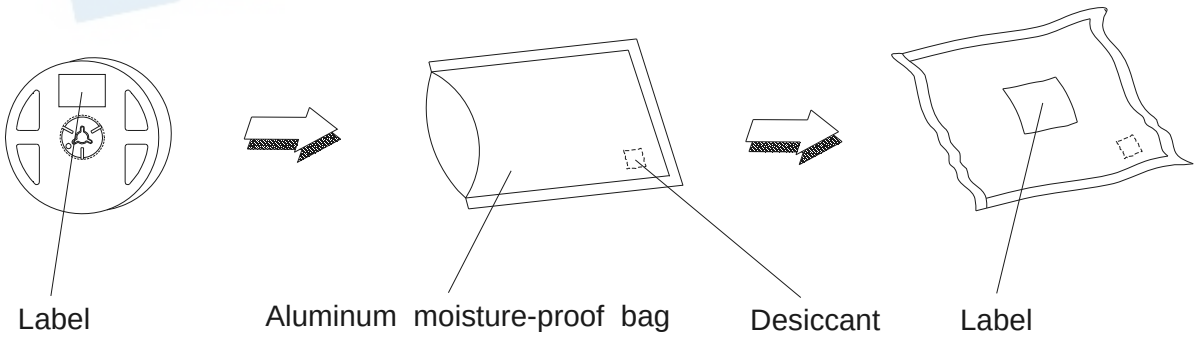

Copyright © 2016, Everlight All Rights Reserved. Release Date: 13.Dec. 2016. Issue No:V4

Ver.:4 Release Date:09/27/2022 狀態:Approved(正式發行)

Reliability Test Items and Conditions

The reliability of products shall be satisfied with items listed below.
Confidence level：90%
LTPD：10%

No.	Items	Test Condition	Test Hours/Cycles	Sample Size	Ac/Re
1	Reflow Soldering	Temp. : 260℃/10sec.	6 Min.	22 PCS.	0/1
2	Thermal Shock	H : +100℃ 20min ∫ 10 sec L : -10℃ 20min	200 Cycles	22 PCS.	0/1
3	Temperature Cycle	H : +100℃ 30min ∫ 5 min L : -40℃ 30min	200 Cycles	22 PCS.	0/1
4	High Temperature/Humidity Reverse Bias	Ta=85℃,85%RH	1000 Hrs.	22 PCS.	0/1
5	High Temperature/Humidity Operation	Ta=85℃,85%RH, I_F = 40 mA	1000 Hrs.	22 PCS.	0/1
6	Low Temperature Storage	Ta=-40℃	1000 Hrs.	22 PCS.	0/1
7	High Temperature Storage	Ta=85℃	1000 Hrs.	22 PCS.	0/1
8	Low Temperature Operation Life	Ta=-40℃, I_F = 75 mA	1000 Hrs.	22 PCS.	0/1
9	High Temperature Operation/ Life#1	Ta=25℃, I_F = 75 mA	1000 Hrs.	22 PCS.	0/1
10	High Temperature Operation/ Life#2	Ta=55℃, I_F =75 mA	1000 Hrs.	22 PCS.	0/1
11	High Temperature Operation/ Life#3	Ta=85℃, I_F = 40 mA	1000 Hrs.	22 PCS.	0/1

Copyright © 2016, Everlight All Rights Reserved. Release Date: 13.Dec. 2016. Issue No:V4

Ver.:4 Release Date:09/27/2022 狀態:Approved(正式發行)

Precautions for Use

1. Over-current-proof
   Customer must apply resistors for protection; otherwise slight voltage shift will cause big current change (Burn out will happen).
2. Storage
   2.1 Do not open moisture proof bag before the products are ready to use.
   2.2 Before opening the package: The LEDs should be kept at 30℃ or less and 90%RH or less.
   2.3 After opening the package: The LED's floor life is 168 Hrs under 30℃ or less and 60% RH or less. If unused LEDs remain, it should be stored in moisture proof packages.
   2.4 If the moisture absorbent material (silica gel) has faded away or the LEDs have exceeded the storage time, baking treatment should be performed using the following conditions.
   Baking treatment: 60±5℃ for 24 hours.
3. Soldering Condition
   3.1 Pb-free solder temperature profile

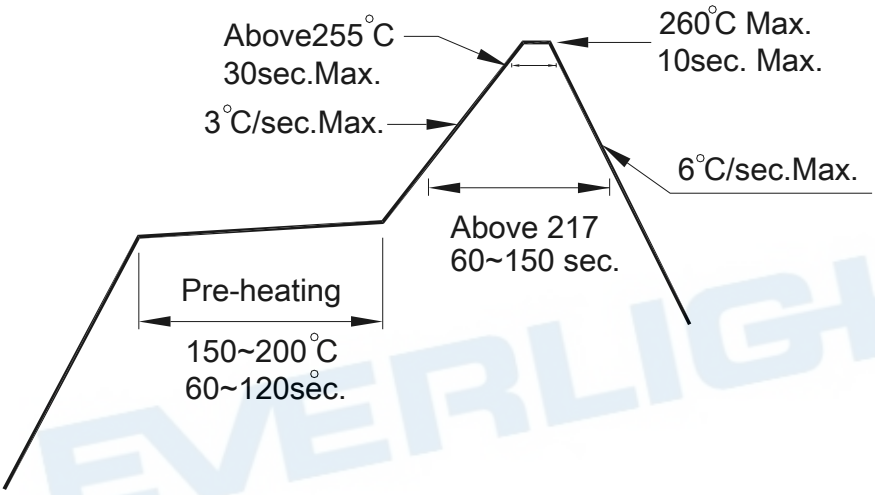

   3.2 Reflow soldering should not be done more than two times.
   3.3 When soldering, do not put stress on the LEDs during heating.
   3.4 After soldering, do not warp the circuit board.

4. Soldering Iron

Copyright © 2016, Everlight All Rights Reserved. Release Date: 13.Dec. 2016. Issue No:V4
Issue No:DSE-0013077 Ver.:4 Release Date:09/27/2022 狀態:Approved(正式發行)

Each terminal is to go to the tip of soldering iron temperature less than 350℃ for 3 seconds within once in less than the soldering iron capacity 25W. Leave two seconds and more intervals, and do soldering of each terminal. Be careful because the damage of the product is often started at the time of the hand solder.

5. Repairing

Repair should not be done after the LEDs have been soldered. When repairing is unavoidable, a double-head soldering iron should be used (as below figure). It should be confirmed beforehand whether the characteristics of the LEDs will or will not be damaged by repairing.

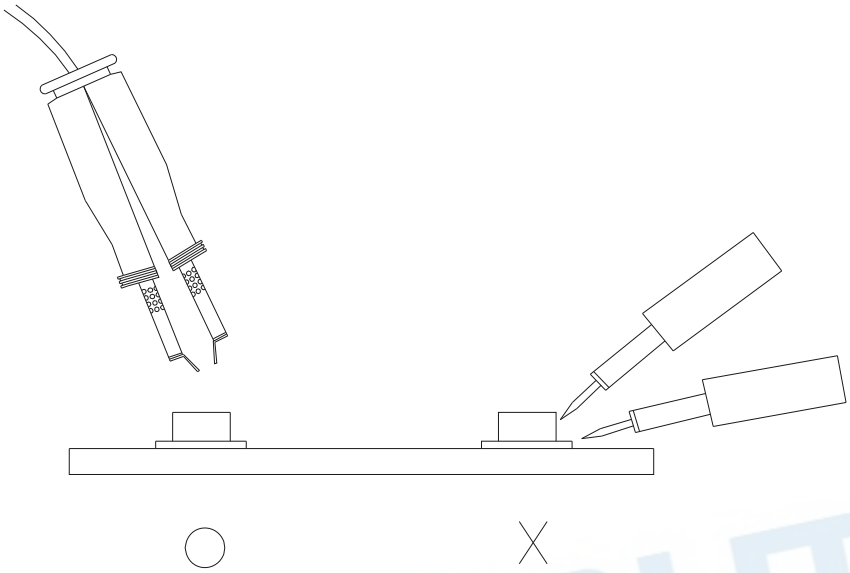

EVERLIGHT

Copyright © 2016, Everlight All Rights Reserved. Release Date: 13.Dec. 2016. Issue No:V4
Issue No:DSE-0013077 Ver.:4 Release Date:09/27/2022 狀態:Approved(正式發行)

DISCLAIMER

1. EVERLIGHT reserves the right(s) on the adjustment of product material mix for the specification.

2. The product meets EVERLIGHT published specification for a period of twelve (12) months from date of shipment.

3. The graphs shown in this datasheet are representing typical data only and do not show guaranteed values.

4. When using this product, please observe the absolute maximum ratings and the instructions for using outlined in these specification sheets. EVERLIGHT assumes no responsibility for any damage resulting from the use of the product which does not comply with the absolute maximum ratings and the instructions included in these specification sheets.

5. These specification sheets include materials protected under copyright of EVERLIGHT. Reproduction in any form is prohibited without obtaining EVERLIGHT's prior consent.

6. This product is not intended to be used for military, aircraft, automotive, medical,

EVERLIGHT

Copyright © 2016, Everlight All Rights Reserved. Release Date: 13.Dec. 2016. Issue No:V4

Ver.:4 Release Date:09/27/2022 狀態:Approved(正式發行)