DATASHEET

Ambient Light Sensor – Surface Mount
ALS-PDIC17-77C/TR8

Features

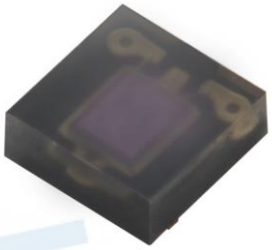

·Close responsively to the human eye spectrum
·Light to Current, analog output
·Good output linearity across wide illumination range
·Low sensitivity variation across various light sources
·Operating temperature performance, -40°C to 85°C
·Wide supply voltage range, 1.8V to 5.5V
·Size : 1.6mm(L)*1.6mm(W)*0.55mm(H)
·The product itself will remain within RoHS compliant version
·Compliance with EU REACH
• Compliance Halogen Free(Br < 900ppm, Cl < 900ppm, Br+Cl < 1500ppm)

Description

The ALS-PDIC17-77C/TR8 is consisting of a photodiode and a current amplification IC. EVERLIGHT ALS series product is a good effective solution to the power saving of display backlighting of mobile appliances, such as the mobile phones, NB and PDAs. Due to the high rejection ratio of infrared radiation, the spectral response of the ambient light sensor is close to that of human eyes.

Applications

·Detection of ambient light to control display backlighting
Mobile devices – mobile phones, PDAs
Computing device – TFT LCD monitor for Notebook computer
Consumer device – TFT LCD TV, plasma TV, video camera, digital camera, toys

Automatic residential and commercial management
·Automatic contrast enhancement for electronic signboard
·Ambient light monitoring device for daylight and artificial light
– Street light, CCD/CCTV

Copyright © 2014, Everlight All Rights Reserved. Release Date : 03.22.2021. Issue No: DLS-0000025 Rev.10

Ver.:10 Release Date:03/30/2021 狀態:Approved(正式發行)

Package Dimensions

Top View

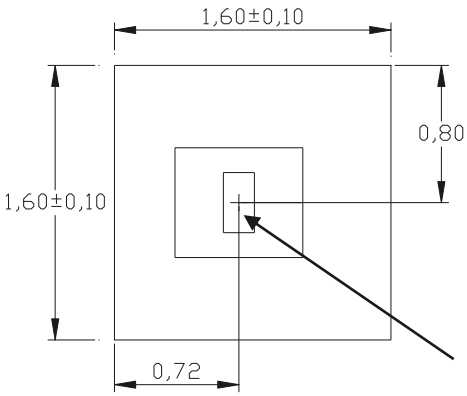

Light Receiving Area

Side View

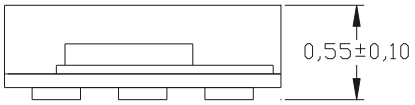

Bottom View

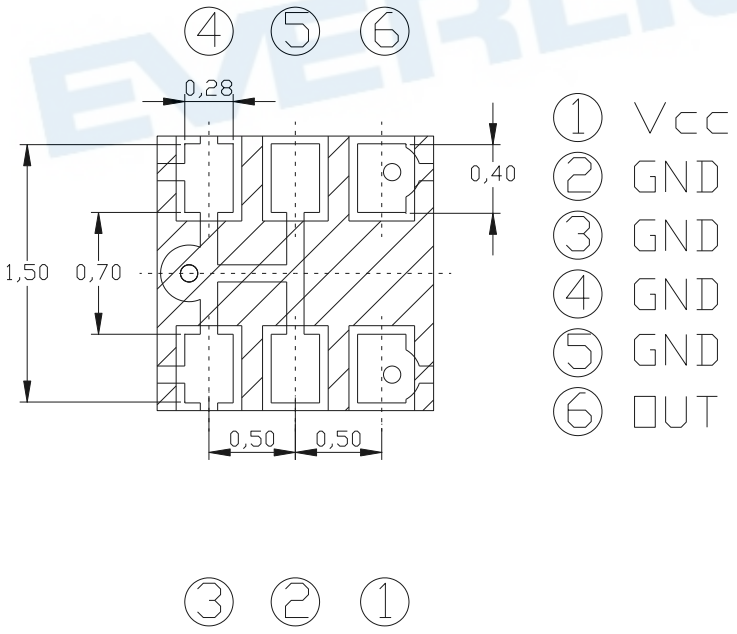

Recommended Soldering Pattern

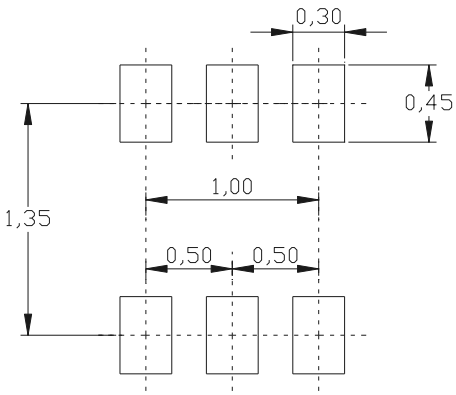

Unit : mm
Tolerances : ±0.1mm

Copyright © 2014, Everlight All Rights Reserved. Release Date : 03.22.2021. Issue No: DLS-0000025 Rev.10

Ver.:10 Release Date:03/30/2021 狀態:Approval(正式發行)

Absolute Maximum Ratings

Parameter	Symbol	Rating	Unit
Supply Voltage	V_{CC}	-0.5~6.0	V
Output Voltage	V_O	0 ~ Vcc-0.8	V
Output Photo Current	I_{PH}	0 ~ 5	mA
Operating Temperature Range	Topr	-40 ~ +85	°C
Storage Temperature Range	Tstg	-40 ~ +100	°C
Soldering Temperature Range [Note1]	T_{sol}	260	°C

Note1: For detail reflow time and the recommended temperature profile, please refer to page 8.

Recommended Operating Conditions

Parameter	Symbol	Min.	Max.	Unit
Operating Temperature	Topr	-40	+85	°C
Supply Voltage	V_{CC}	1.8	5.5	V

Copyright © 2014, Everlight All Rights Reserved. Release Date : 03.22.2021. Issue No: DLS-0000025 Rev.10

Ver.:10 Release Date:03/30/2021 狀態:Approval(正式發行)

Electrical and Optical Characteristics (T_a=25℃)

Parameter		Symbol	Min.	Typ.	Max.	Unit	Test Condition
Supply Current		I_{CC}	--	480	950	μA	Vcc = 3V, Ev = 1000Lux R_L = 1kΩ [Note2]
Dark Current		I_D	--	--	100	nA	Vcc=3V , Ev= 0Lux
Light Current		I_{PH1}	2.7	4	5.4	μA	Vcc=3V; Ev= 10Lux [Note1]
		I_{PH2}	27	40	54	μA	Vcc=3V; Ev= 100Lux [Note1]
		I_{PH3}	--	48	92	μA	Vcc=3V; Ev= 100Lux [Note2]
		I_{PH4}	--	400	540	μA	Vcc=3V; Ev=1000Lux [Note1]
Photocurrent Ratio		I_{PH3} / I_{PH2}	--	1.2	1.7	--	--
Saturation Output Voltage		Vo	2.20	2.35	--	V	Vcc=3V; Ev= 100Lx, R_L=150KΩ [Fig.3]
Peak Sensitivity Wavelength		λ_p	--	550	--	nm	--
Switching Time	Rise Time	tr	--	11	1000	μs	Vcc=3V,R_L=5kΩ Ev = 1000 Lux [Fig.4]
	Fall Time	tf	--	400	2000	μs	
	Delay Time	td	--	250	--	μs	
	Storage Time	ts	--	35	--	μs	

Note:

1. White Fluorescent light (Color Temperature = 6500K) is used as light source. However, White LED is substituted in mass production.
2. Illuminance by CIE standard illuminant-A / 2856K, incandescent lamp.

Copyright © 2014, Everlight All Rights Reserved. Release Date : 03.22.2021. Issue No: DLS-0000025 Rev.10

Ver.:10 Release Date:03/30/2021 狀態:Approval(正式發行)

Fig.1 Block Diagram

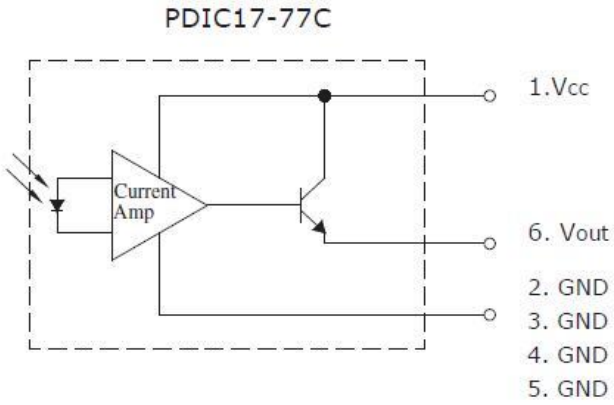

Fig.2 Measurement Method of Light Current

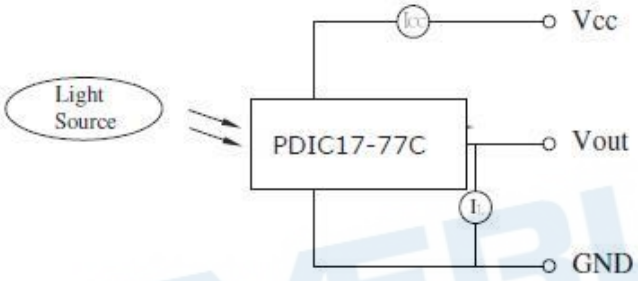

Fig.3 Measurement Method of Saturation Output Voltage

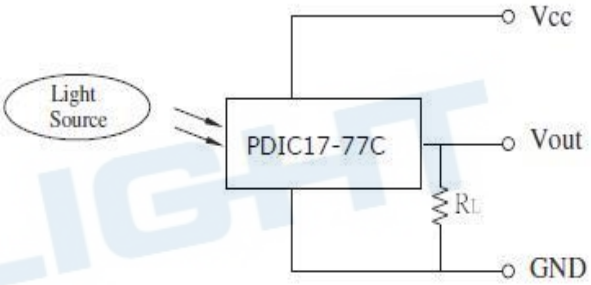

Fig.4 Switching Time Measurement Method

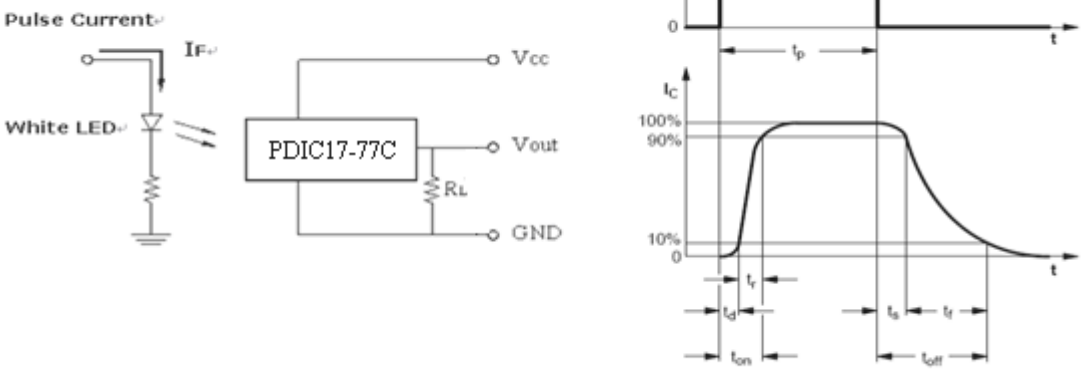

Copyright © 2014, Everlight All Rights Reserved. Release Date : 03.22.2021. Issue No: DLS-0000025 Rev.10
www.everlight.com
Ver.:10 Release Date:03/30/2021 狀態:Approved(正式發行)

Typial Electrical and Optical Characteristics Curves

Fig.5 Light Current vs. Illuminance

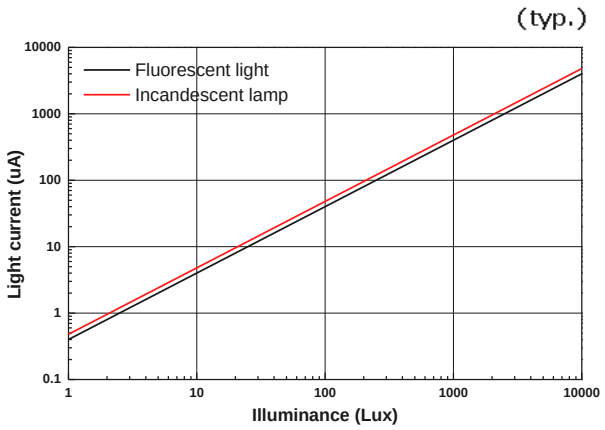

Fig.6 Dark Current vs. Temperature

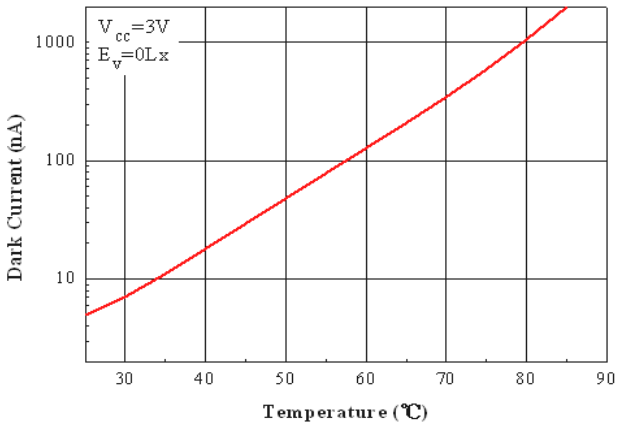

Fig.7 Light current vs. Temperature

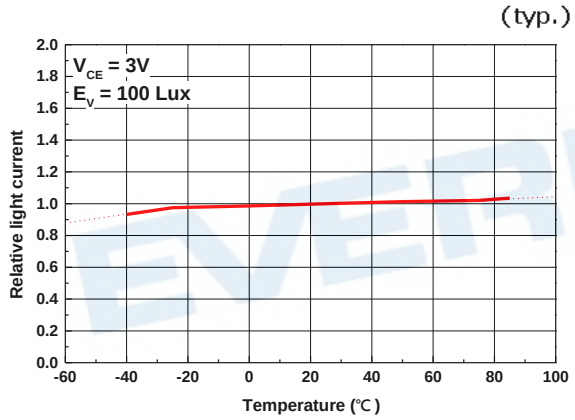

Fig.8 Light current vs. Supply Voltage

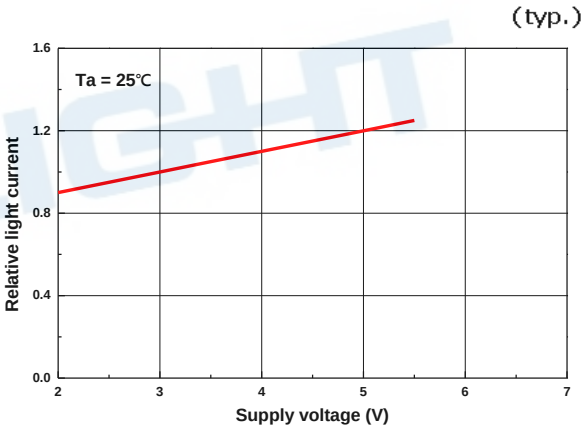

Fig.9 Spectral Response

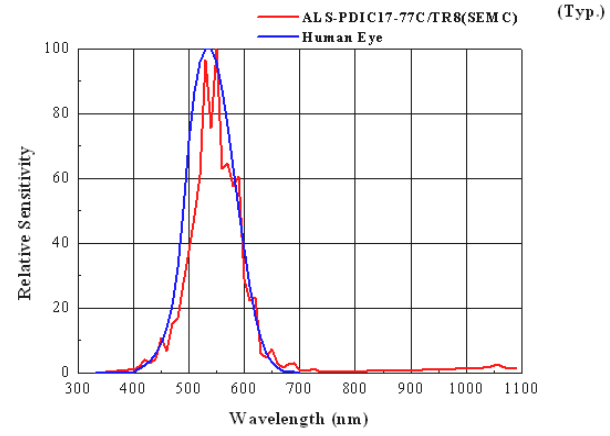

Fig.10 Output Voltage vs. Illuminance

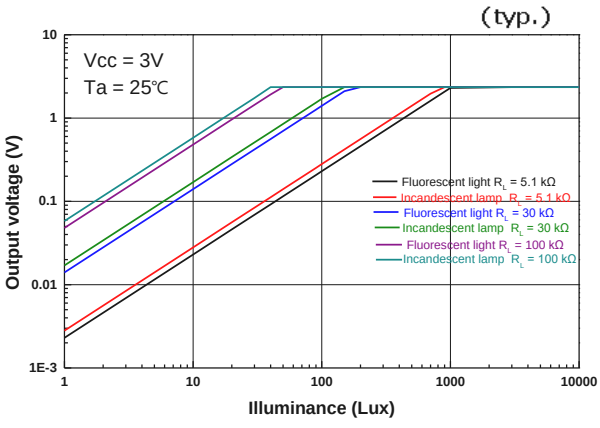

Copyright © 2014, Everlight All Rights Reserved. Release Date : 03.22.2021. Issue No: DLS-0000025 Rev.10

Ver.:10 Release Date:03/30/2021 狀態:Approval(正式發行)

Fig.11 Consumption current vs. Illuminance

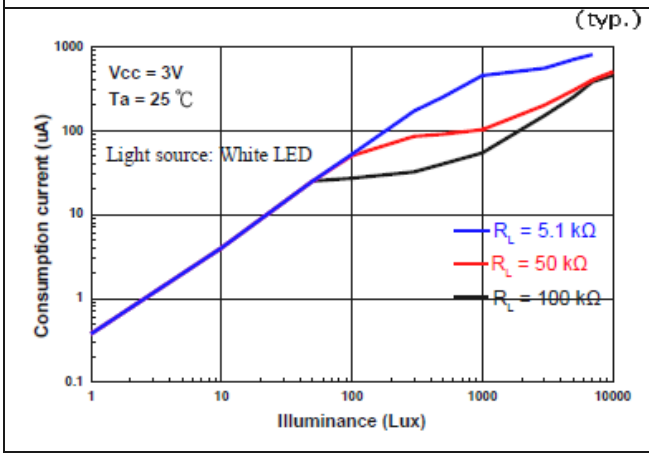

Fig.12 Relative consumption current vs. Temperature

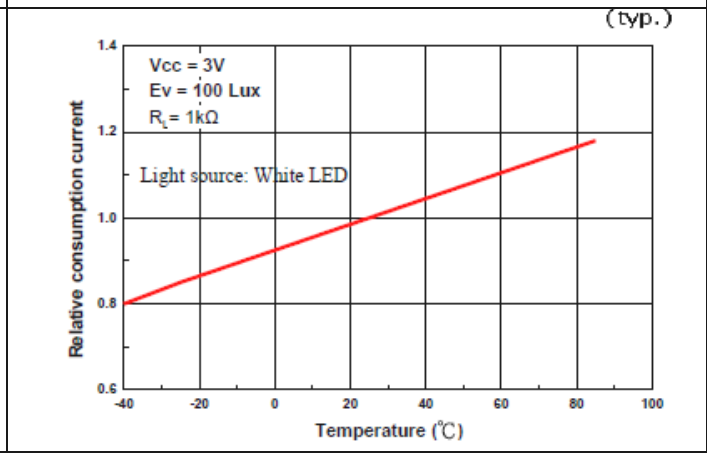

Converting Photocurrent to Voltage

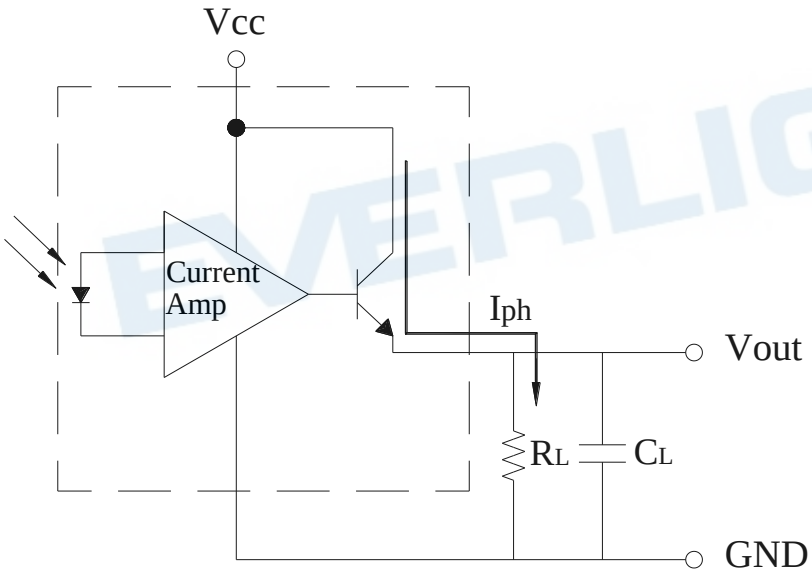

Note:

1. The output voltage (Vout) is the product of photocurrent (I_{PH}) and loading resistor (R_L)
2. A right loading resistor shall be chosen to meet the requirement of maximum ambient light, and output saturation voltage:

$$V_{out(max.)} = I_{out(max.)} \times R_L \leqq V_{out(saturation)} = V_{cc} - 0.8V$$

3. To avoid 60Hz ripple from fluorescent lamps, we suggest that the time constant must be greater than 0.5 second:

Copyright © 2014, Everlight All Rights Reserved. Release Date : 03.22.2021. Issue No: DLS-0000025 Rev.10

Ver.:10 Release Date:03/30/2021 狀態:Approval(正式發行)

$R_L \times C_L \geqq 0.5$ (empirical data)

Recommended method of storage

1. Do not open moisture proof bag before devices are ready to use.
2. Shelf life in sealed bag from the bag seal date:
   18 months at 10°C~30°C and < 90% RH.
3. After opening the package, the devices must be stored at 10°C~30°C and ≤ 60%RH, and used within 1 year (floor life).
4. If the moisture absorbent material (desiccant material) has faded or unopened bag has exceeded the shelf life or devices (out of bag) have exceeded the floor life, baking treatment is required.
5. If baking is required, refer to IPC/JEDEC J-STD-033 for bake procedure or recommend the following conditions:
   192 hours at 40°C +5/–0°C and < 5 % RH (reeled/tubed/loose units) or
   96 hours at 60°C ± 5°C and < 5 % RH (reeled/tubed/loose units) or
   24 hours at 125°C ± 5°C, not suitable for reel or tubes.

Recommended Solder Profile

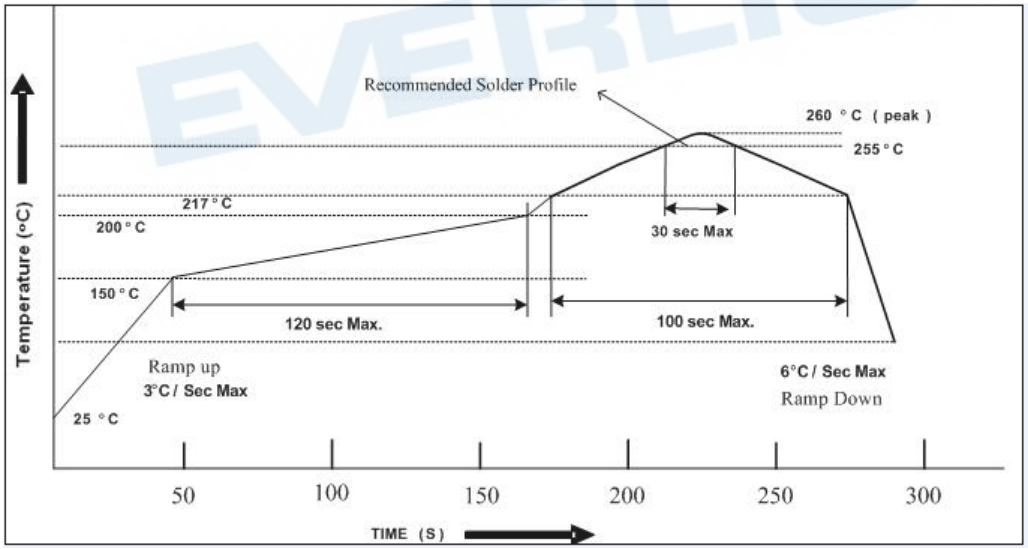

Notice:

(1) Reflow soldering should not be done more than two times.

(2) When soldering, do not put stress on the devices during heating.

(3) After soldering, do not warp the circuit board.

Copyright © 2014, Everlight All Rights Reserved. Release Date : 03.22.2021. Issue No: DLS-0000025 Rev.10

Ver.:10 Release Date:03/30/2021 狀態:Approval(正式發行)

Soldering Iron

Each terminal is to go to the tip of soldering iron temperature less than 350℃ for 3 seconds within once in less than the soldering iron capacity 25W. Leave two seconds and more intervals, and do soldering of each terminal. Be careful because the damage of the product is often started at the time of the hand solder.

Repairing

Repair should not be done after the device have been soldered. When repairing is unavoidable, a double-head soldering iron should be used (as below figure). It should be confirmed beforehand whether the characteristics of the device will or will not be damaged by repairing.

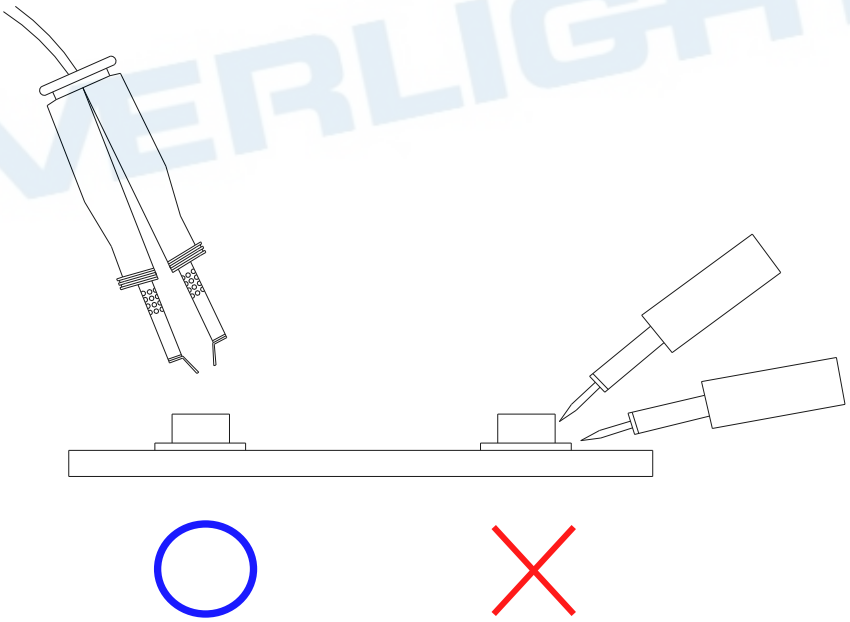

Copyright © 2014, Everlight All Rights Reserved. Release Date : 03.22.2021. Issue No: DLS-0000025 Rev.10

Ver.:10 Release Date:03/30/2021 狀態:Approved(正式發行)

Packing Quantity Specification

4000 PCS/ 1 Reel

Label Format

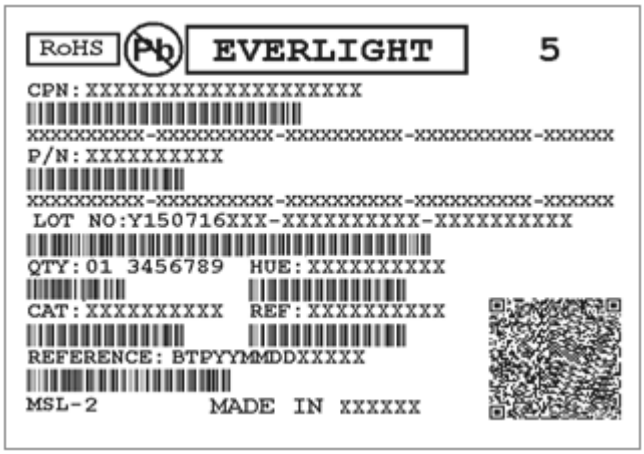

CPN: Customer's Production Number

P/N : Production Number

QTY: Packing Quantity

CAT: Ranks

HUE: Peak Wavelength

REF: Reference

LOT No: Lot Number

MADE IN XXXXXX: Production Place

Reel Dimensions

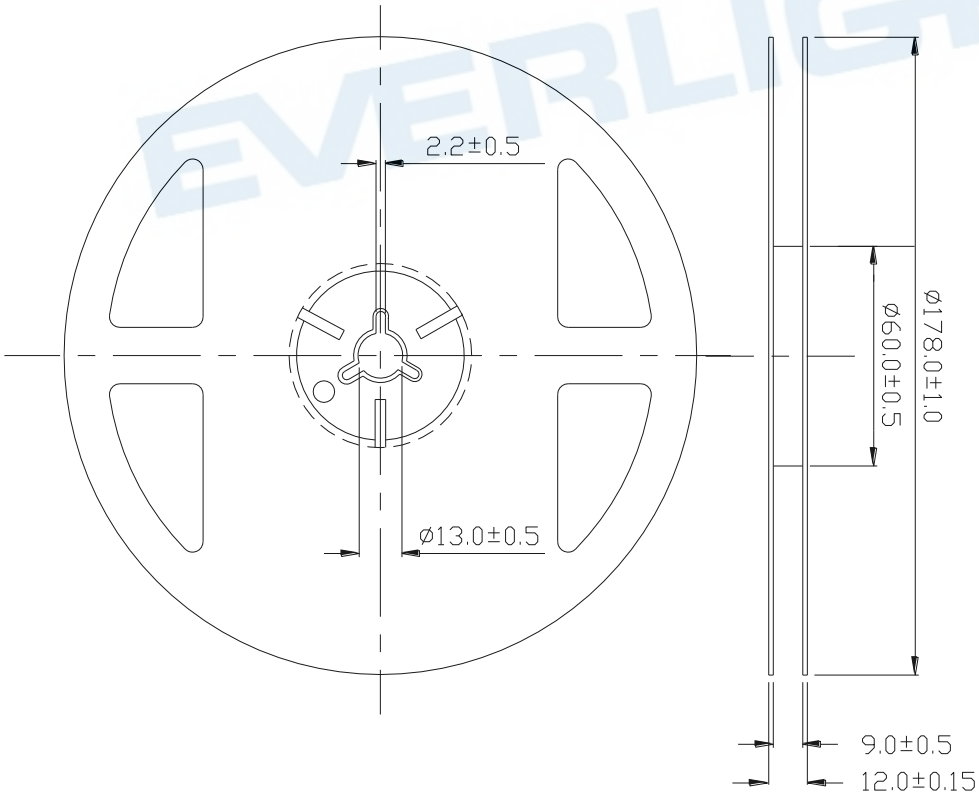

Unit: mm
Tolerance: ±0.1mm

Copyright © 2014, Everlight All Rights Reserved. Release Date : 03.22.2021. Issue No: DLS-0000025 Rev.10

Ver.:10 Release Date:03/30/2021 狀態:Approved(正式發行)

Tape Dimensions

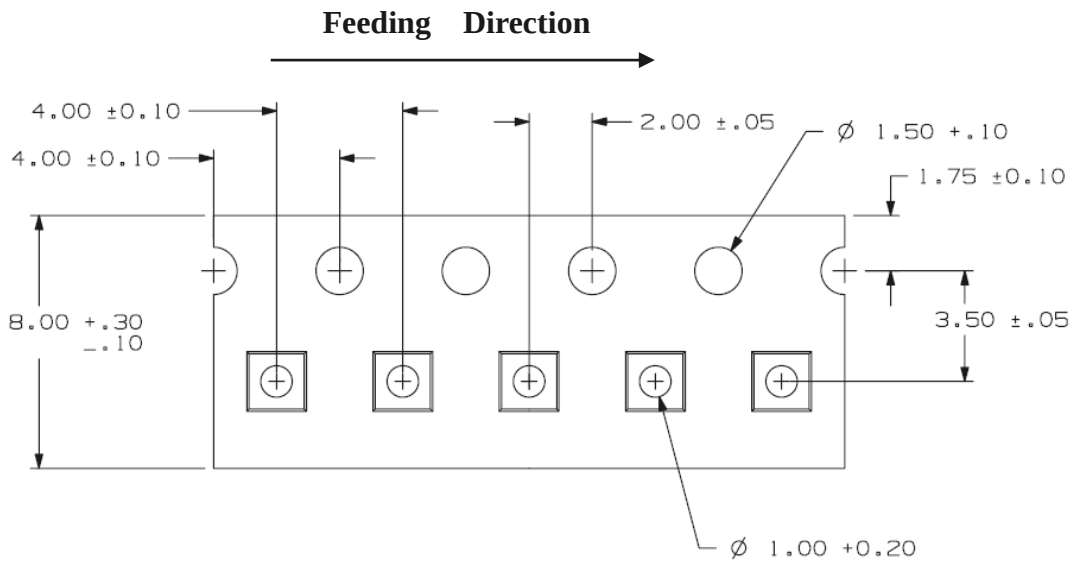

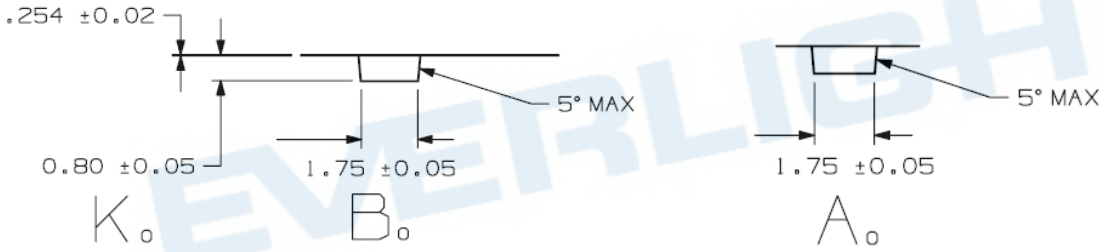

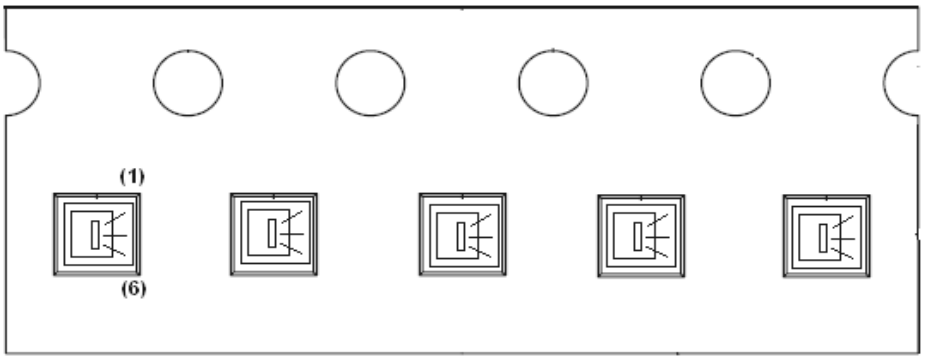

Unit: mm
Tolerance: ±0.1mm

Copyright © 2014, Everlight All Rights Reserved. Release Date : 03.22.2021. Issue No: DLS-0000025 Rev.10

Ver.:10 Release Date:03/30/2021 狀態:Approved(正式發行)

DISCLAIMER

1. EVERLIGHT reserves the right(s) on the adjustment of product material mix for the specification.
2. The product meets EVERLIGHT published specification for a period of twelve (12) months from date of shipment.
3. The graphs shown in this datasheet are representing typical data only and do not show guaranteed values.
4. When using this product, please observe the absolute maximum ratings and the instructions for using outlined in these specification sheets. EVERLIGHT assumes no responsibility for any damage resulting from the use of the product which does not comply with the absolute maximum ratings and the instructions included in these specification sheets.
5. These specification sheets include materials protected under copyright of EVERLIGHT. Reproduction in any form is prohibited without obtaining EVERLIGHT's prior consent.
6. This product is not intended to be used for military, aircraft, automotive, medical, life sustaining or life saving applications or any other application which can result in human injury or death. Please contact authorized Everlight sales agent for special application request.

EVERLIGHT

Copyright © 2014, Everlight All Rights Reserved. Release Date : 03.22.2021. Issue No: DLS-0000025 Rev.10

Ver.:10 Release Date:03/30/2021 狀態:Approved(正式發行)