DATASHEET

Ambient Light Sensor
Surface - Mount
ALS-PDIC17-55C/TR8

Features

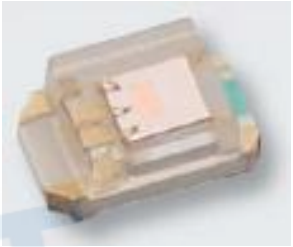

·Close responsively to the human eye spectrum
·Light to Current, analog output
·Good output linearity across wide illumination range
·Low sensitivity variation across various light sources
·Operating temperature performance, -40°C to 85°C
·Wide supply voltage range, 1.8V to 5.5V
·Size : 2.0mm(L)*1.25mm(W)*0.8mm(H)
·The product itself will remain within RoHS compliant version
- Compliance with EU REACH
- Compliance Halogen Free(Br < 900ppm, Cl < 900ppm, Br+Cl < 1500ppm)

Description

The ALS-PDIC17-55C/TR8 is a low cost ambient light sensor, consisting of a photodiode and a current amplification IC. EVERLIGHT ALS series product is a good effective solution to the power saving of display backlighting of mobile appliances, such as the mobile phones, NB and PDAs. Due to the high rejection ratio of infrared radiation, the spectral response of the ambient light sensor is close to that of human eyes.

Applications

·Detection of ambient light to control display backlighting
Mobile devices – mobile phones, PDAs
Computing device – TFT LCD monitor for Notebook computer
Consumer device – TFT LCD TV, plasma TV, video camera, digital camera, toys

Automatic residential and commercial management
·Automatic contrast enhancement for electronic signboard
·Ambient light monitoring device for daylight and artificial light
– Street light, CCD/CCTV

Copyright © 2012, Everlight All Rights Reserved. Release Date : 09.30.2020. Issue No: DLS-0000012 Rev.7

Ver.:7 Release Date:10/12/2020 狀態:Approved(正式發行)

Package Dimensions

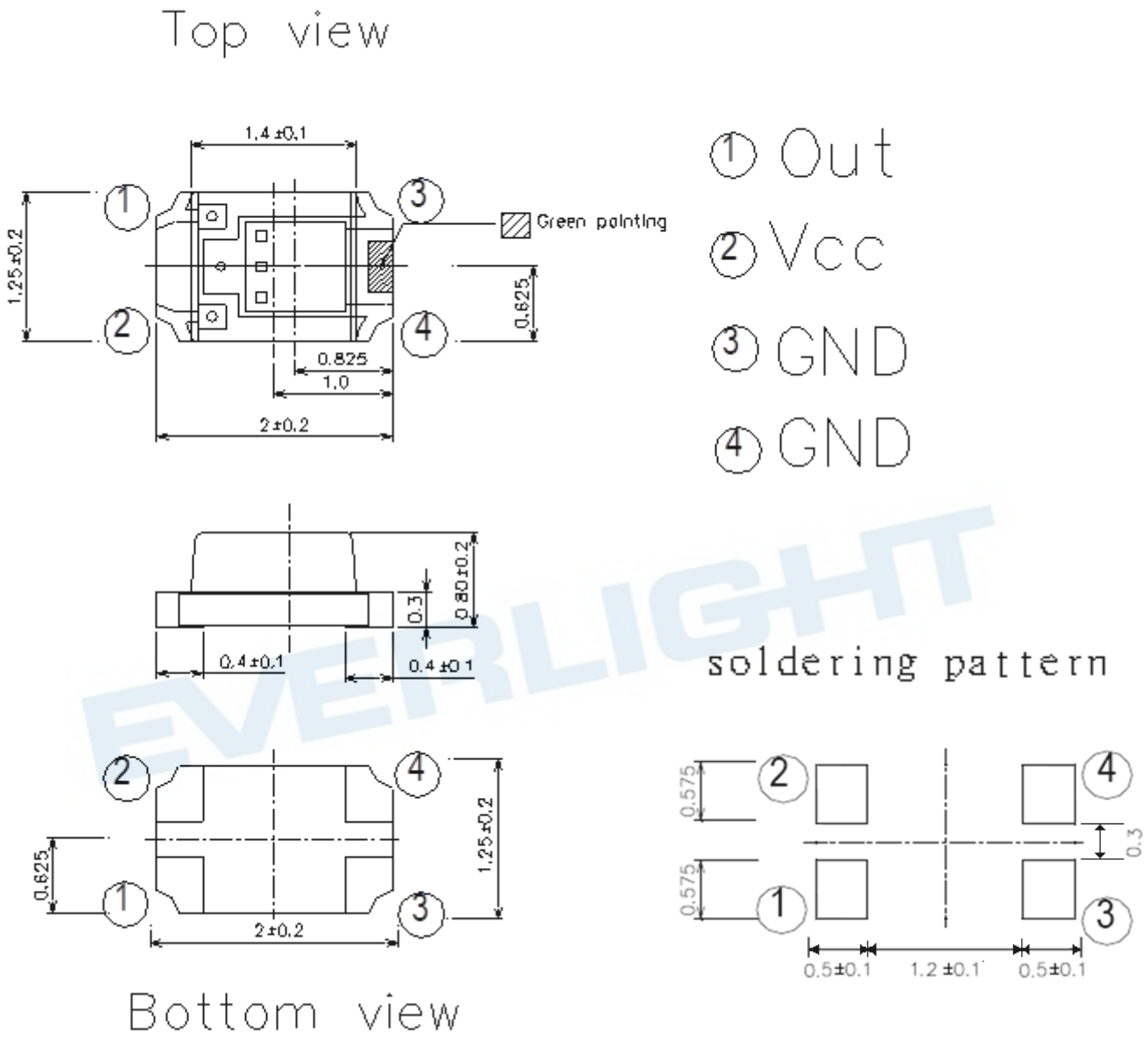

Notes: 1.All dimensions are in millimeters
2.Tolerances unless dimensions ±0.1mm

Copyright © 2012, Everlight All Rights Reserved. Release Date : 09.30.2020. Issue No: DLS-0000012 Rev.7

Ver.:7 Release Date:10/12/2020 狀態:Approved(正式發行)

Absolute Maximum Ratings

Parameter	Symbol	Rating	Unit
Supply Voltage	V_{CC}	-0.5~6.0	V
Output Voltage	V_O	0 ~ Vcc-0.8	V
Output Photo Current	I_{PH}	0 ~ 5	mA
Operating Temperature Range	Topr	-40 ~ +85	°C
Storage Temperature Range	Tstg	-40 ~ +100	°C
Soldering Temperature Range [Note1]	T_{sol}	260	°C
Human Body Model ESD	HBM	3000	V
Machine Model ESD	MM	300	V

Note1: For detail reflow time and the recommended temperature profile, please refer to page 8.

Recommended Operating Conditions

Parameter	Symbol	Min.	Max.	Unit
Operating Temperature	Topr	-40	+85	°C
Supply Voltage	V_{CC}	1.8	5.5	V

Copyright © 2012, Everlight All Rights Reserved. Release Date : 09.30.2020. Issue No: DLS-0000012 Rev.7

Ver.:7 Release Date:10/12/2020 狀態:Approved(正式發行)

Electrical and Optical Characteristics (T_a=25℃)

Parameter		Symbol	Min.	Typ.	Max.	Unit	Test Condition
Dark Current		I_D	--	--	100	nA	V_{CC}=3V E_V= 0Lux
Light Current		I_{PH2}	27	--	54	μA	V_{CC}=3V; E_V= 100Lux [Note1]
		I_{PH3}	32.4	--	70.2	μA	V_{CC}=3V; E_V= 100Lux [Note2]
		I_{PH4}	270	--	540	μA	V_{CC}=3V; E_V=1000Lux [Note1] [Fig.2]
Photocurrent Ratio		I_{PH3} / I_{PH2}	--	1.2	--	--	--
Peak Sensitivity Wavelength		λ_p	--	590	--	nm	--
Switching Time	Rise Time	tr	--	0.36	--	ms	V_{CC}=3V,R_L=27KΩ [Fig.4]
	Fall Time	tf	--	1.13	--	ms	
	Delay Time	td	--	2.30	--	ms	
	Storage Time	ts	--	0.69	--	ms	

Note:

1. White Fluorescent light (Color Temperature = 6500K) is used as light source. However, White LED is substituted in mass production.
2. Illuminance by CIE standard illuminant-A / 2856K, incandescent lamp.

Copyright © 2012, Everlight All Rights Reserved. Release Date : 09.30.2020. Issue No: DLS-0000012 Rev.7

Ver.:7 Release Date:10/12/2020 狀態:Approved(正式發行)

Fig.1 Block Diagram

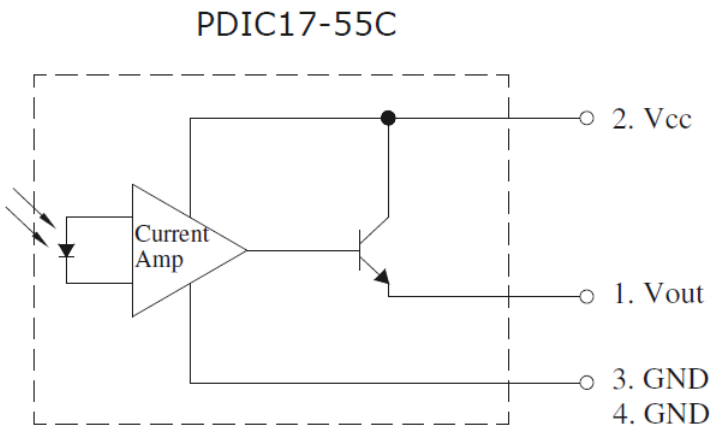

Fig.2 Measurement Method of Light Current

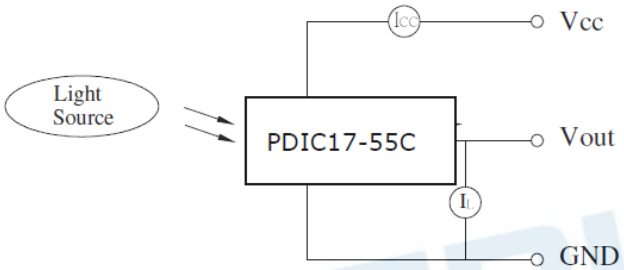

Fig.3 Measurement Method of Saturation Output Voltage

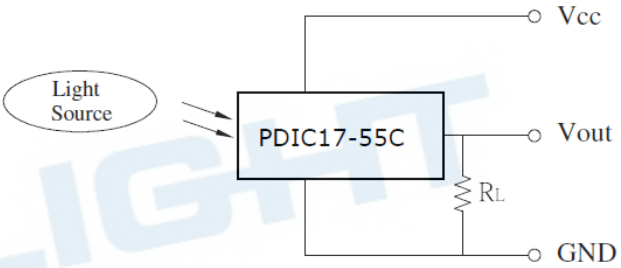

Fig.4 Switching Time Measurement Method

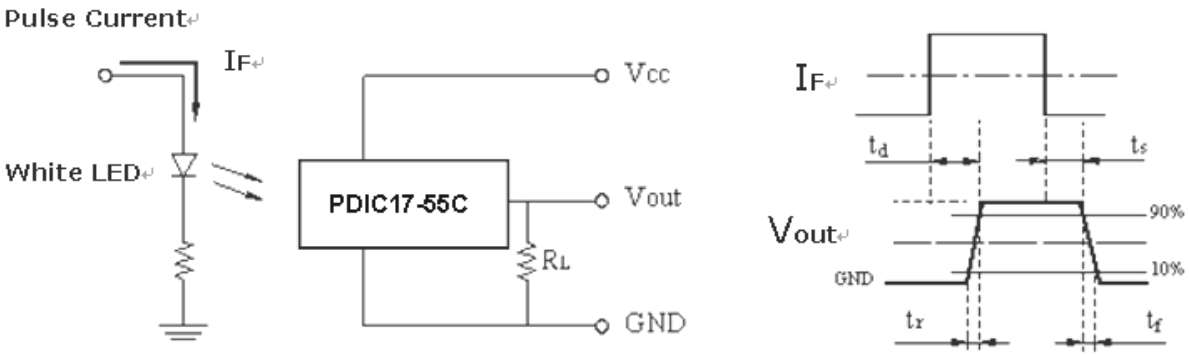

Copyright © 2012, Everlight All Rights Reserved. Release Date : 09.30.2020. Issue No: DLS-0000012 Rev.7

Ver.:7 Release Date:10/12/2020 狀態:Approved(正式發行)

Typical Electrical and Optical Characteristics Curves

Fig.5 Light Current vs. Illuminance

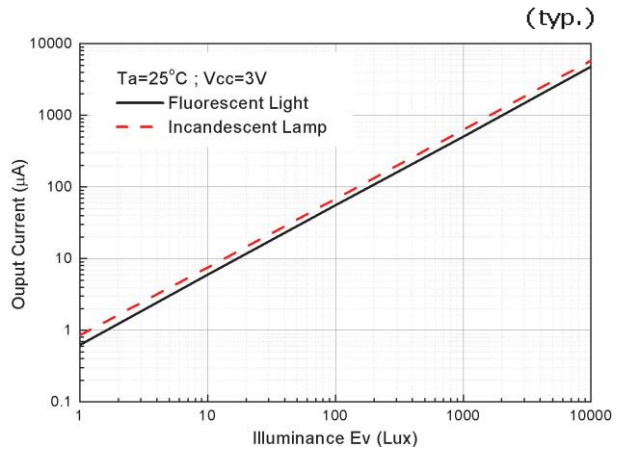

Fig.6 Dark Current vs. Temperature

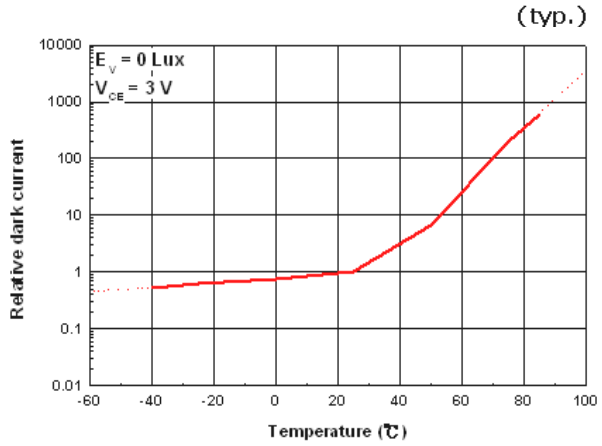

Fig.7 Light current vs. Temperature

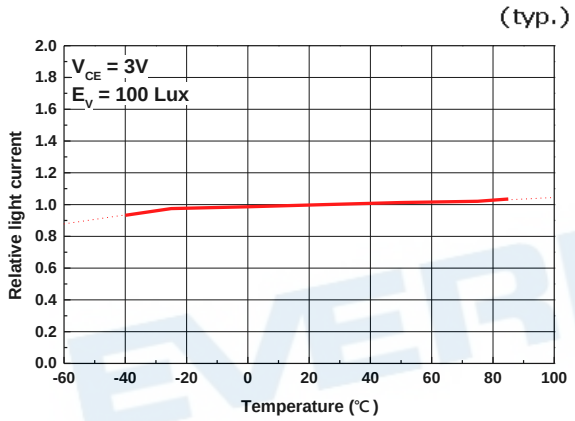

Fig.8 Light current vs. Supply Voltage

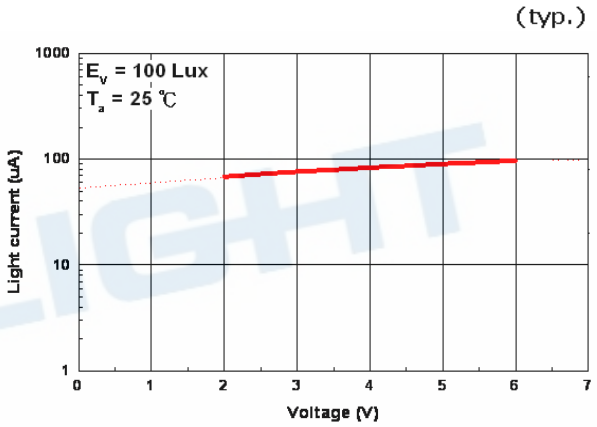

Fig.9 Spectral Response

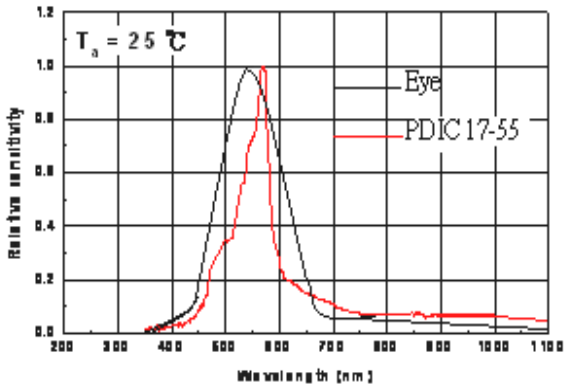

Fig.10 Output voltage vs. Temperature

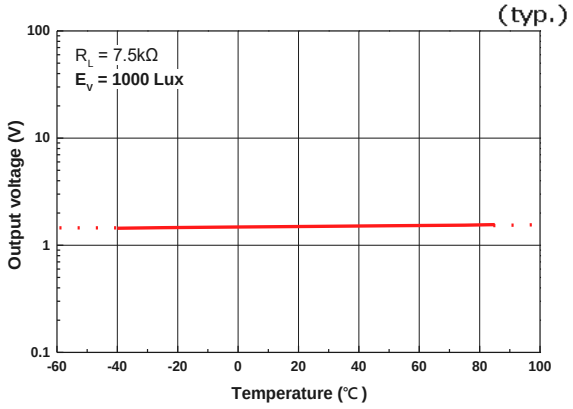

Copyright © 2012, Everlight All Rights Reserved. Release Date : 09.30.2020. Issue No: DLS-0000012 Rev.7
www.everlight.com
Ver.:7 Release Date:10/12/2020 狀態:Approved(正式發行)

Converting Photocurrent to Voltage

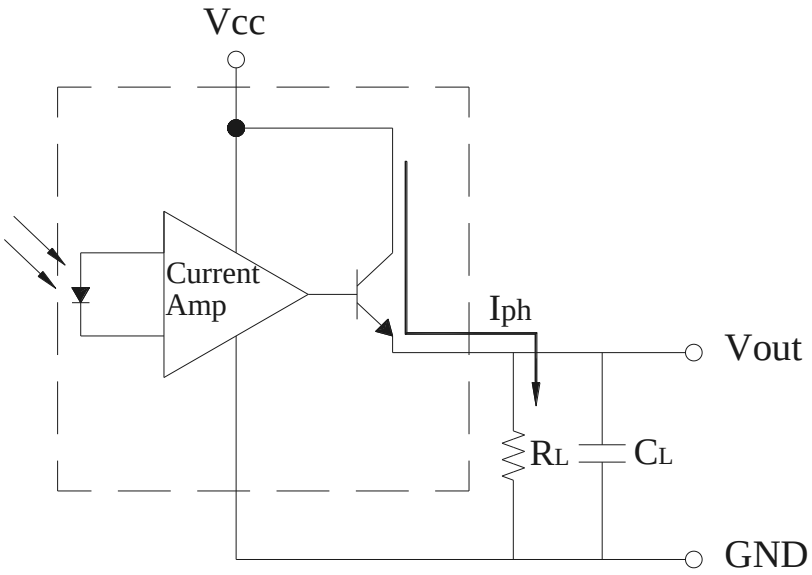

Note:

1. The output voltage (V_{out}) is the product of photocurrent (I_{PH}) and loading resistor (R_L)
2. A right loading resistor shall be chosen to meet the requirement of maximum ambient light, and output saturation voltage:

$$V_{out(max.)} = I_{out(max.)} \times R_L \leqq V_{out(saturation)} = V_{cc} - 0.8V$$

3. To avoid 60Hz ripple from fluorescent lamps, we suggest that the time constant must be greater than 0.5 second:

$$R_L \times C_L \geqq 0.5 \quad \text{(empirical data)}$$

Copyright © 2012, Everlight All Rights Reserved. Release Date : 09.30.2020. Issue No: DLS-0000012 Rev.7

Ver.:7 Release Date:10/12/2020 狀態:Approved(正式發行)

Recommended method of storage

Reflow Terms: JEDEC Level 3 Specification

Dry box storage is recommended as soon as the aluminum bag has been opened prevent moisture absorption. The following conditions should be observed, if dry boxes are not available:

- Storage temperature 10℃ to 30℃
- Storage humidity ≦60%RH max

After more than 168 hours under these conditions moisture content will be too high for reflow soldering. In case of moisture absorption, the devices will recover to former condition by drying under the following condition:

192 hours at 40℃+5℃/-0℃ and 5%RH (dry air / nitrogen), or
96 hours at 60℃+5℃ and < 5%RH for all device containers, or
24 hours at 125℃+5℃ not suitable for reel or tubes

ESD Precaution:

Proper storage and handing procedures should be followed to prevent ESD damage to the devices especially when they are removed from the Anti-static bag. Electro-Static Sensitive Devices warning labels are on the packing.

Recommended Solder Profile

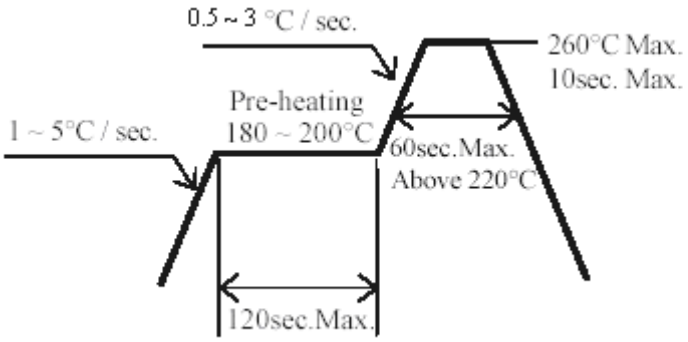

Notice:

(1) Reflow soldering should not be done more than two times.
(2) When soldering, do not put stress on the devices during heating.
(3) After soldering, do not warp the circuit board.

Copyright © 2012, Everlight All Rights Reserved. Release Date : 09.30.2020. Issue No: DLS-0000012 Rev.7
Ver.:7 Release Date:10/12/2020 狀態:Approved(正式發行)

Soldering Iron

Each terminal is to go to the tip of soldering iron temperature less than 350℃ for 3 seconds within once in less than the soldering iron capacity 25W. Leave two seconds and more intervals, and do soldering of each terminal. Be careful because the damage of the product is often started at the time of the hand solder.

Repairing

Repair should not be done after the device have been soldered. When repairing is unavoidable, a double-head soldering iron should be used (as below figure). It should be confirmed beforehand whether the characteristics of the device will or will not be damaged by repairing.

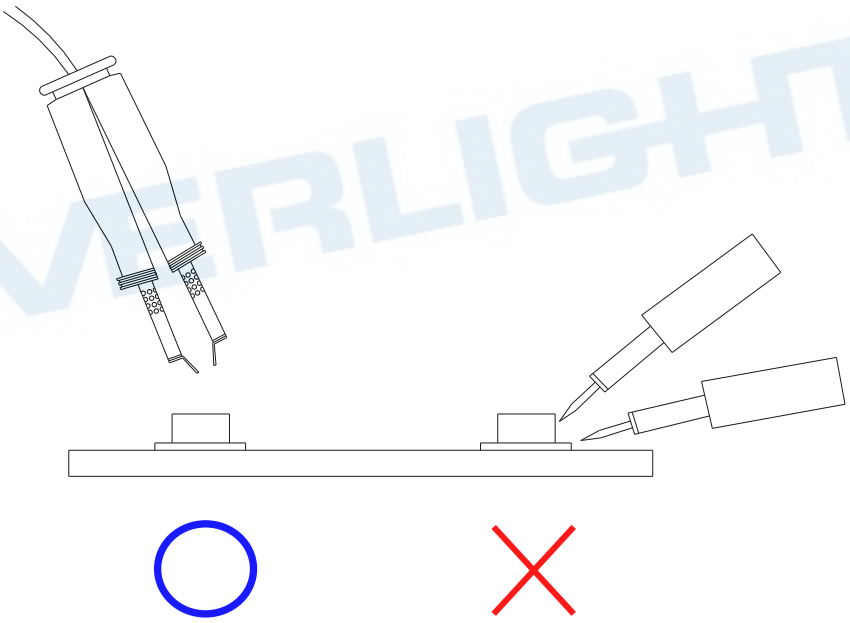

Copyright © 2012, Everlight All Rights Reserved. Release Date : 09.30.2020. Issue No: DLS-0000012 Rev.7

Ver.:7 Release Date:10/12/2020 狀態:Approved(正式發行)

Packing Quantity Specification

3000 PCS/ 1 Reel

Label Format

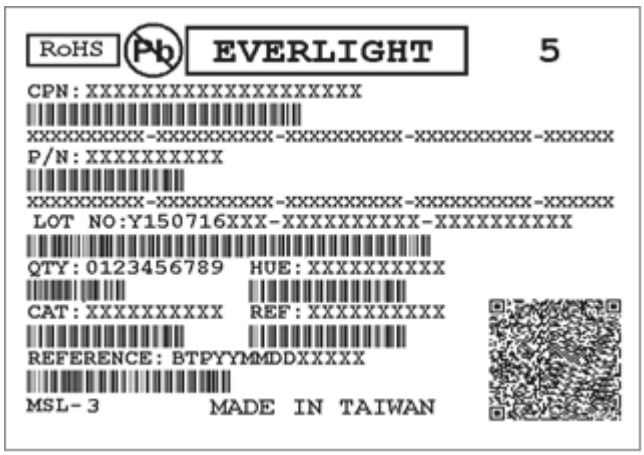

- CPN: Customer's Product Number
- P/N: Product Number
- QTY: Packing Quantity
- CAT: Luminous Intensity Rank
- HUE: Dom. Wavelength Rank
- REF: Forward Voltage Rank
- LOT No: Lot Number

Reel Dimensions

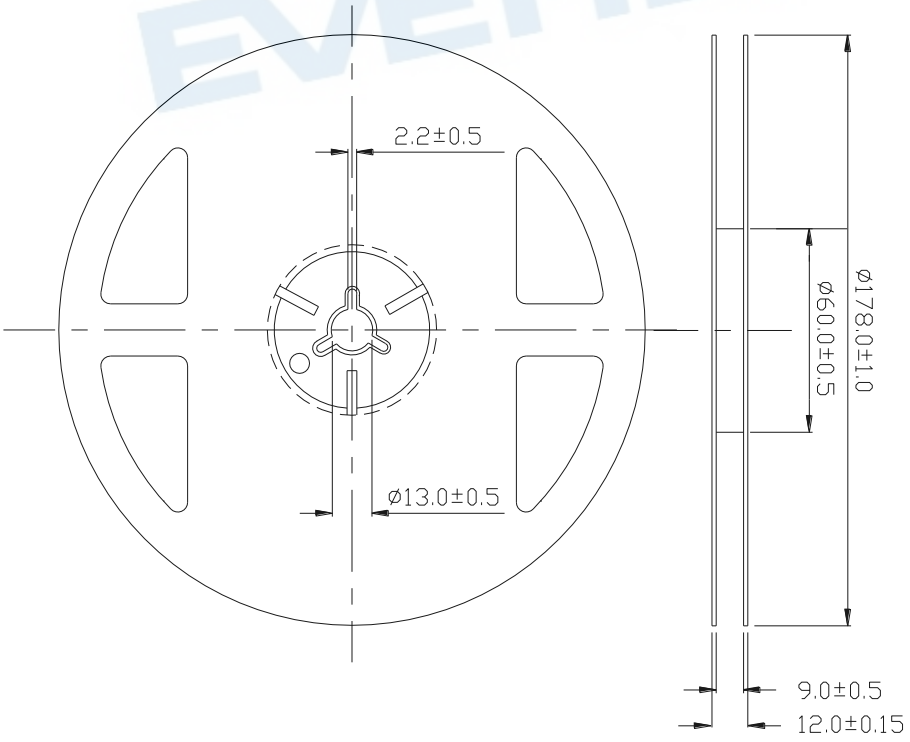

Unit: mm
Tolerance: ±0.1mm

Copyright © 2012, Everlight All Rights Reserved. Release Date : 09.30.2020. Issue No: DLS-0000012 Rev.7
Ver.:7 Release Date:10/12/2020 狀態:Approved(正式發行)

Tape Dimensions

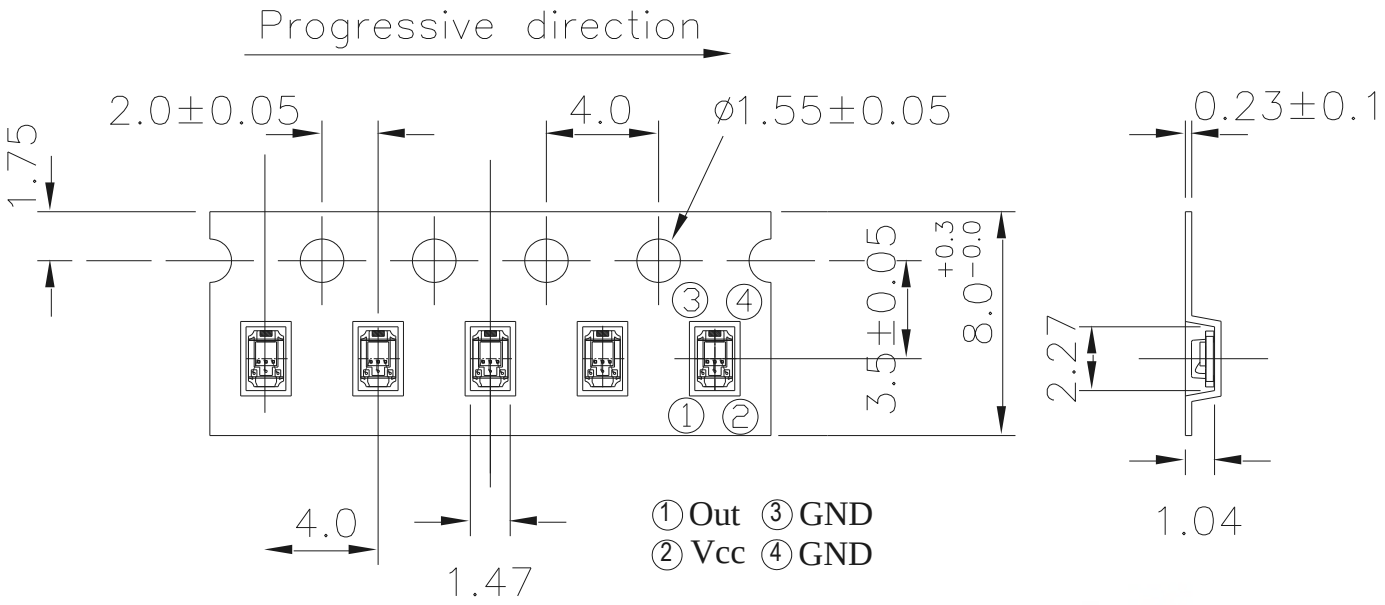

Unit: mm
Tolerance: ±0.1mm

Moisture Resistant Packaging

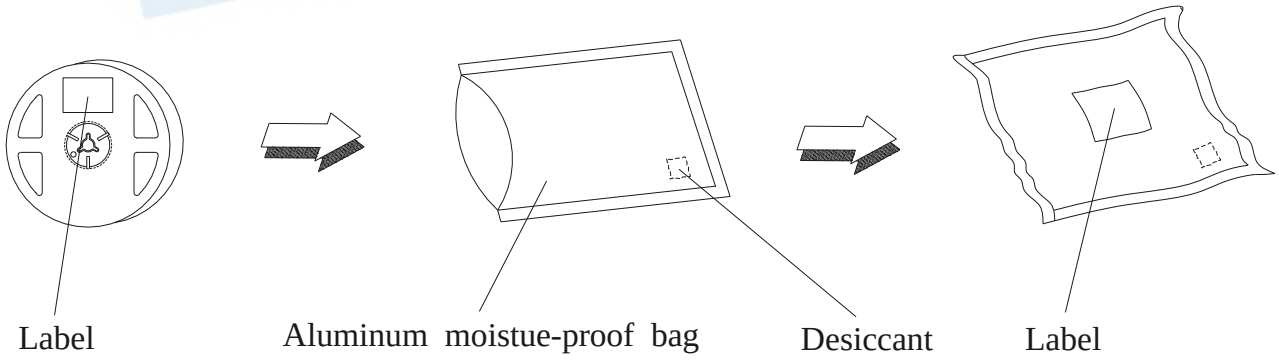

Copyright © 2012, Everlight All Rights Reserved. Release Date : 09.30.2020. Issue No: DLS-0000012 Rev.7

Ver.:7 Release Date:10/12/2020 狀態:Approved(正式發行)

DISCLAIMER

1. EVERLIGHT reserves the right(s) on the adjustment of product material mix for the specification.
2. The product meets EVERLIGHT published specification for a period of twelve (12) months from date of shipment.
3. The graphs shown in this datasheet are representing typical data only and do not show guaranteed values.
4. When using this product, please observe the absolute maximum ratings and the instructions for using outlined in these specification sheets. EVERLIGHT assumes no responsibility for any damage resulting from the use of the product which does not comply with the absolute maximum ratings and the instructions included in these specification sheets.
5. These specification sheets include materials protected under copyright of EVERLIGHT. Reproduction in any form is prohibited without obtaining EVERLIGHT's prior consent.
6. This product is not intended to be used for military, aircraft, automotive, medical, life sustaining or life saving applications or any other application which can result in human injury or death. Please contact authorized Everlight sales agent for special application request.

Copyright © 2012, Everlight All Rights Reserved. Release Date : 09.30.2020. Issue No: DLS-0000012 Rev.7

Ver.:7 Release Date:10/12/2020 狀態:Approved(正式發行)