WILLAS RoHS COMPLIANT

1.0A Dfl-ăă tl-ăăƛØl-űŜŘ Cl-ăű wŜŎ2ØŜŃè wŜŎűƛŦƛŜŃ - p0V~ мл00V

CC a млм
THRU
CC a млт

PRIMARY CHARACTERISTICS	
V_{RRM}	50V-1000V
I_O	1.0A
V_F	1.3V
$T_{J,Max}$	150℃

SMA(DO-214AC) PACKAGE

Marking Code : See Table

Ex : FFM107

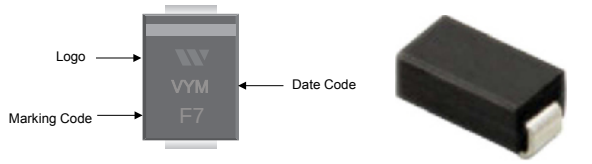

V:Product Lines
Y:1-digit BC year code, 4-2014,5-2015…etc
M:Month, EX : 1-1,2-2,---10-O,11-N,12-D



FEATURES

- Glass passivated device
- Ideal for surface mounted applications
- Low leakage current
- Metallurgically bonded construction
- Moisture Sensitivity Level 1

MECHANICAL DATA

- Case：Molded plastic,SMA(DO-214AC)
- Polarity：Shown above
- Terminals :Plated terminals, solderable per MIL-STD-750,Method 2026
- Epoxy : UL94-V0 rated flame retardant

MAXIMUM RATINGS (At T_A = 25°C unless otherwise noted)

RATINGS	SYMBOL	FFM101	FFM102	FFM103	FFM104	FFM105	FFM106	FFM107	UNITS
Maximum Recurrent Peak Reverse Voltage	V_{RRM}	50	100	200	400	600	800	1000	Volts
Maximum RMS Voltage	V_{RMS}	35	70	140	280	420	560	700	Volts
Maximum DC Blocking Voltage	V_{DC}	50	100	200	400	600	800	1000	Volts
Maximum Average Forward Rectified Current at T_A = 55°C	I_O	1.0							Amps
Peak Forward Surge Current 8.3 ms single half sine-wave superimposed on rated load (JEDEC method)	I_{FSM}	30							Amps
Maximum Thermal Resistance	(Note 2) $R_{\theta JL}$	30							°C/W
	(Note 3) $R_{\theta JA}$	70							°C/W
Typical Junction Capacitance (Note 1)	C_J	15							pF
Operating and Storage Temperature Range	T_J, T_{STG}	-65 to + 175							°C

ELECTRICAL CHARACTERISTICS (At T_A = 25°C unless otherwise noted)

CHARACTERISTICS		SYMBOL	FFM101	FFM102	FFM103	FFM104	FFM105	FFM106	FFM107	UNITS
Maximum Forward Voltage at 1.0A DC		V_F	1.3							Volts
Maximum Full Load Reverse Current,Full cycle Average at T_A=25°C		I_R	50							uAmps
Maximum DC Reverse Current at	@T_A = 25°C		5.0							uAmps
Rated DC Blocking Voltage	@T_A = 125°C		100							uAmps
Maximum Reverse Recovery Time (Note 4)		trr	150				250	500		nSec

NOTES : 1. Measured at 1.0 MHz and applied average voltage of 4.0VDC
2. Thermal resistance junction to terminal 6.0mm² copper pads to each terminal.
3. Thermal resistance junction to ambient, 6.0mm² copper pads to each terminal.
4. Test Conditions: I_F = 0.5A, I_R = -1.0A, I_{RR} = -0.25A

RATING AND CHARACTERISTIC CURVES (FFM101 THRU FFM107)

FIG. 1 - TYPICAL FORWARD CURRENT DERATING CURVE

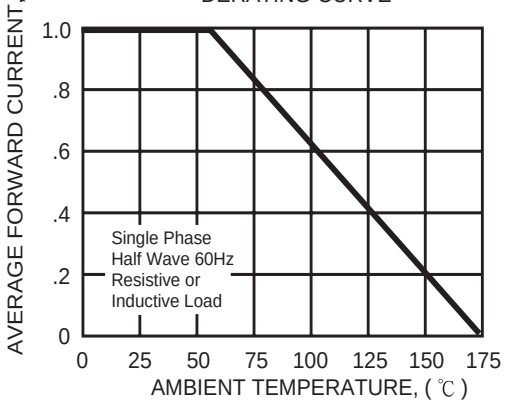

FIG. 2 - MAXIMUM NON-REPETITIVE FORWARD SURGE CURRENT

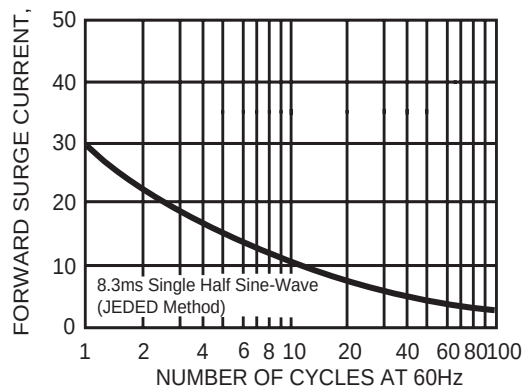

FIG. 3 - TYPICAL REVERSE CHARACTERISTICS

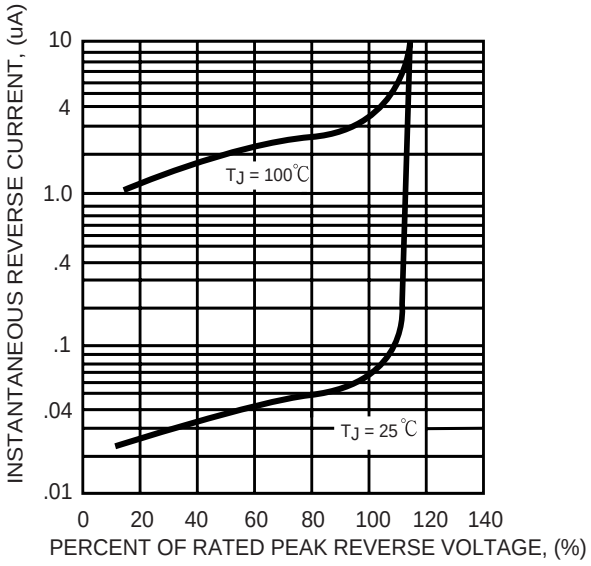

FIG. 4 - TYPICAL INSTANTANEOUS FORWARD CHARACTERISTICS

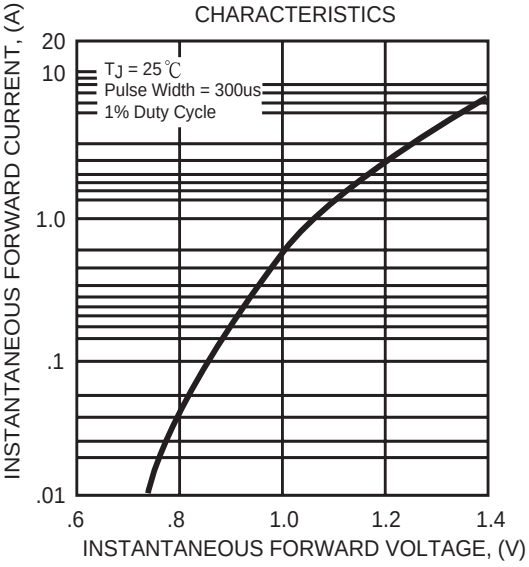

FIG. 5 - TEST CIRCUIT DIAGRAM AND REVERSE RECOVERY TIME CHARACTERISTIC

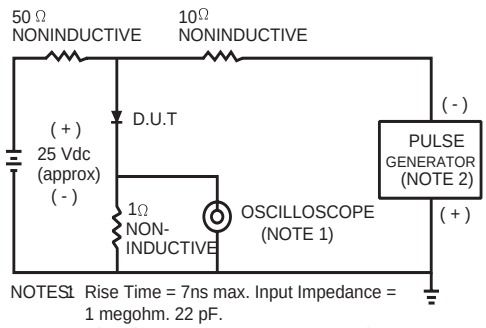

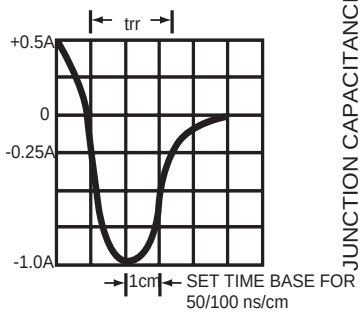

NOTES: 1. Rise Time = 7ns max. Input Impedance = 1 megohm. 22 pF.
2. Rise Time = 10ns max. Source Impedance = 50 ohms.

FIG. 6 - TYPICAL JUNCTION CAPACITANCE

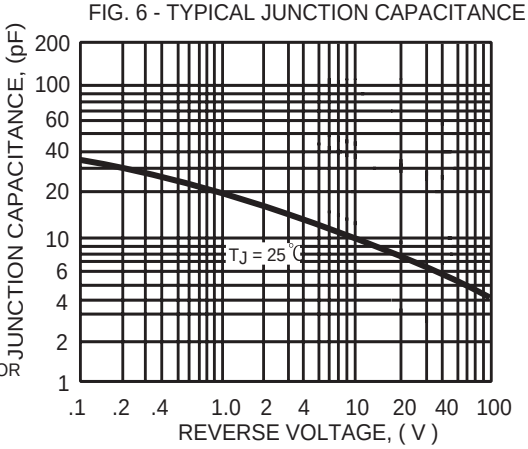

Outline Drawing

SMA(DO-214AC)

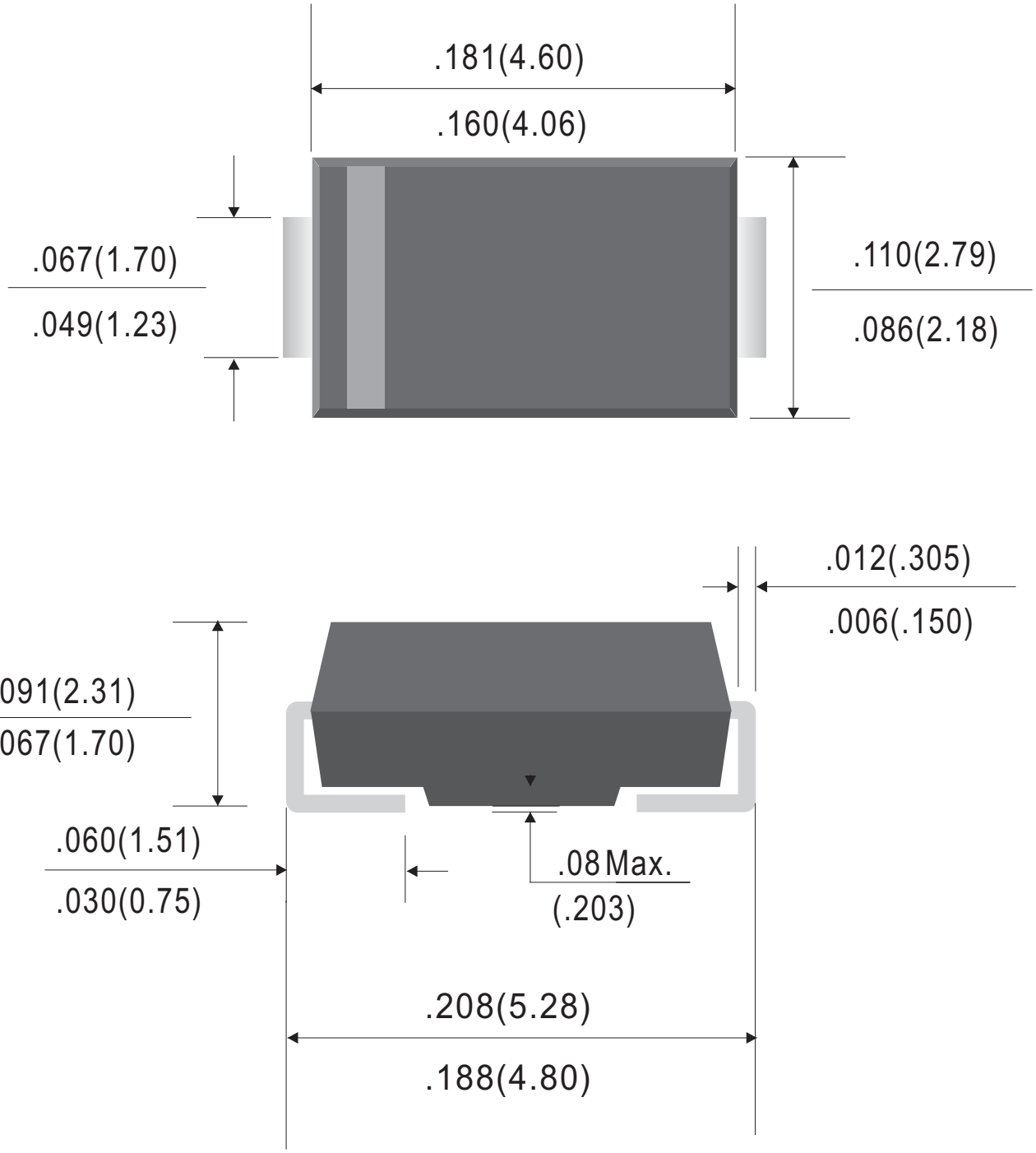

Dimensions in inches and (millimeters)

Rev.D

Suggested Soldering Pad Layout	SMA(DO-214AC)

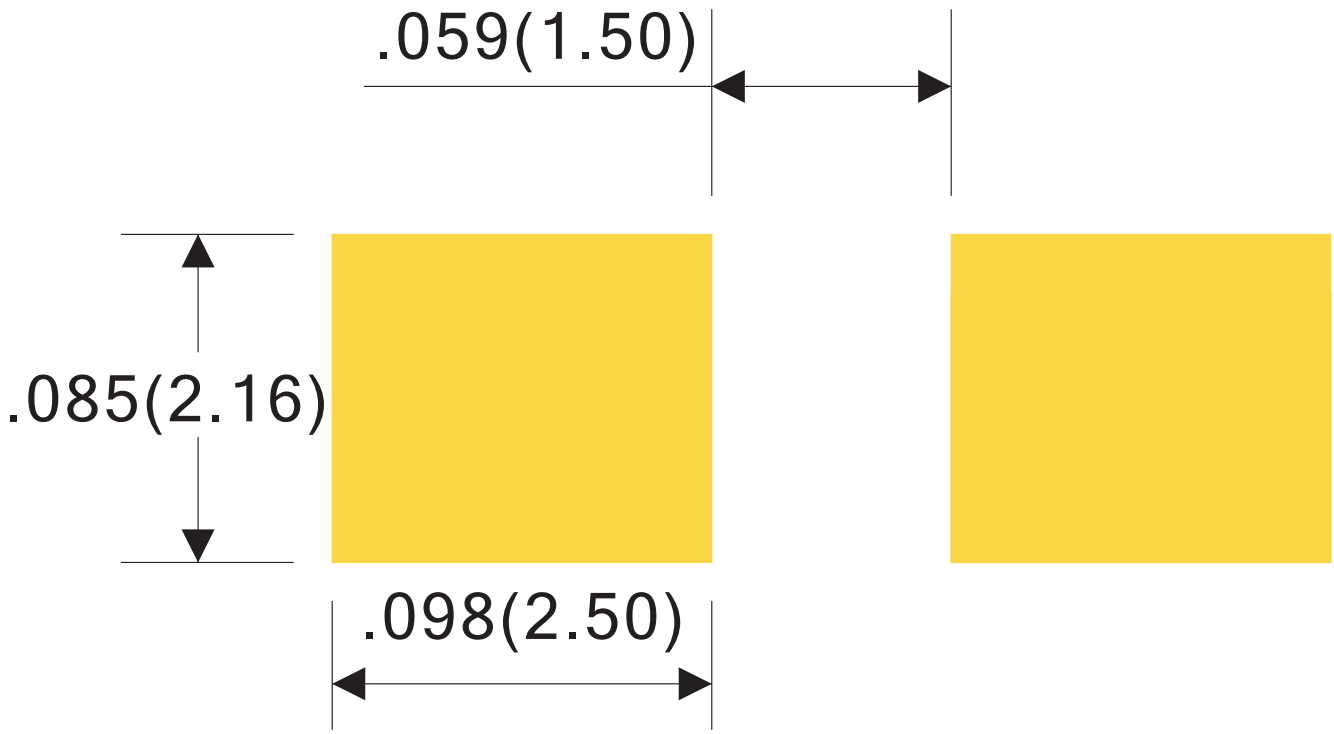

Dimensions in inches and (millimeters)

RevA

Reel Taping Sepecification - Surface Mount Device

Reel Packing

PACKAGE	PER REEL EA	REEL DIA (m/m)	BOX SIZE (m/m)	PER BOX EA	CARTION (m/m)	PER CARTION EA	GROSS WEIGHT (Kg)
SMA	5,000	330	340*340*40	10,000	355*360*350	80,000	15.0
SMB	3,000	330	340*340*40	6,000	355*360*350	48,000	13.6
SMC	3,000	330	340*340*40	6,000	355*360*350	48,000	18.5

Note. Packing tape color : It's contains colorless & Black.

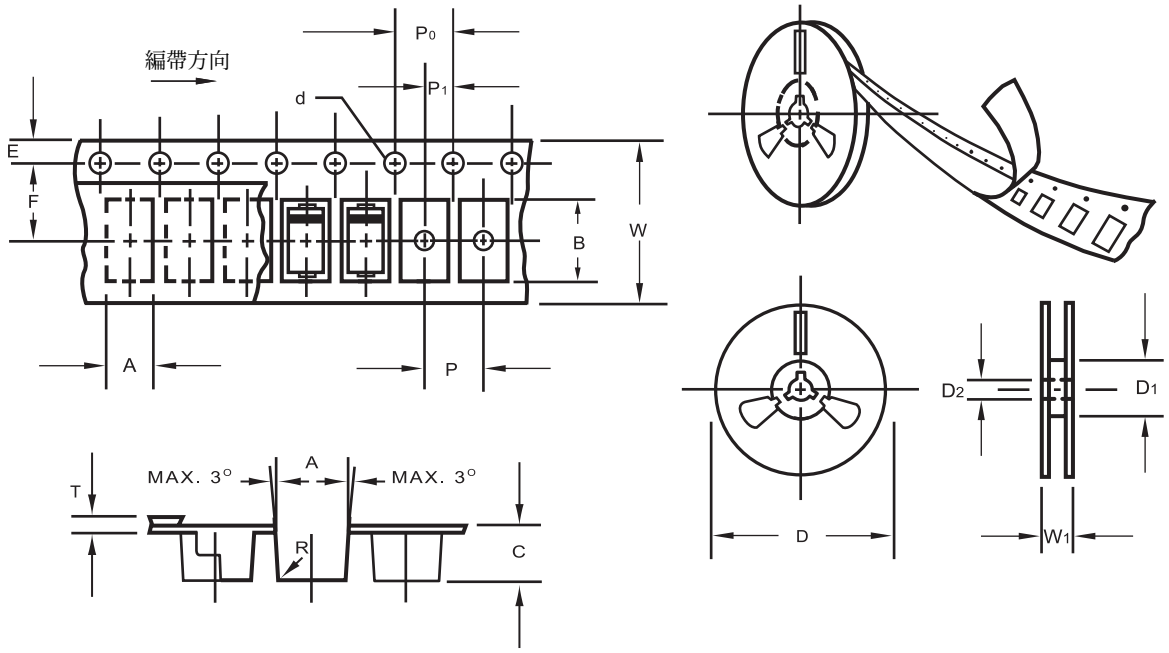

ITEM	SYMBOL	DO214AC (SMA) mm(inch)	DO214AA (SMB) mm(inch)	DO214AB (SMC) mm(inch)
Carrier width	A	3.0 ± 0.1 (.122 ±.004)	3.65 ± 0.1 (.148 ±.004)	6.0 ± 0.1 (.240 ±.004)
Carrier length	B	5.4 ± 0.1 (.213 ±.004)	5.69 ± 0.1 (.224 ±.004)	8.30 ± 0.1 (.330 ±.004)
Carrier depth	C	2.4 ± 0.1 (.098 ±.004)	2.67 ± 0.1 (.105 ±.004)	2.5 ± 0.1 (.100 ±.004)
Sprocket hole	d	1.5 ± 0.1 (.059 ±.004)	1.5 ± 0.1 (.059 ±.004)	1.5 ± 0.1 (.059 ±.004)
Reel outside diameter	D	330 ±5.0 (13 ±0.20)	330 ±5.0 (13 ±0.20)	330 ±5.0 (13 ±0.20)
Reel inner diameter	D1	8.0 ± 0.2 (3.15 ±.008)	8.0 ± 0.2 (3.15 ±.008)	8.0 ± 0.2 (3.15 ±.008)
Feed hole diameter	D2	13 ± 0.5 (.152 ±.020)	13 ± 0.5 (.152 ±.020)	13 ± 0.5 (.152 ±.020)
Strocket hole position	E	1.5 ± 0.1 (.059 ±.004)	1.5 ± 0.1 (.059 ±.004)	1.5 ± 0.1 (.059 ±.004)
Punch hole position	F	5.65 ± 0.05 (.222 ±.002)	5.65 ± 0.05 (.222 ±.002)	7.65 ± 0.05 (.301 ±.002)
Punch hole pitch	P	4.0 ± 0.1 (.157 ±.004)	8.0 ± 0.1 (.315 ±.004)	8.0 ± 0.1 (.315 ±.004)
Sprocket hole pitch	P0	4.0 ± 0.1 (.157 ±.004)	4.0 ± 0.1 (.157 ±.004)	4.0 ± 0.1 (.157 ±.004)
Embossment center	P1	2.0 ± 0.1 (.79 ±.004)	2.0 ± 0.1 (.79 ±.004)	4.0 ± 0.1 (.157 ±.004)
Totall tape thickness	T	0.30 ± .05 (.012 ±.002)	0.6 MAX.	0.6 MAX.
Tape width	W	12.0 ± 0.2 (.472 ±.008)	12.0 ± 0.2 (.472 ±.008)	16.0 ± 0.2 (.630 ±.008)
Reel with	W1	16.8 ± 2.0 (.661 ±.079)	16.8 ± 2.0 (.661 ±.079)	24.0 ± 2.0 (.945 ±.079)

NOTE: Devices are packed in accordance with EIA standard RS-481-A and specification given above.

Ordering Information:

Device PN	Packing
Part Number -T(1)G(2)-WS(3)	Tape&Reel: 5 Kpcs/Reel

Note: (1) Packing code, Tape & Reel Packing

(2) RoHS product for packing code suffix ”G” ; Halogen free product for packing code suffix “H”

(3) WS : Willas brand abbreviation, Label Type does not display

*****Disclaimer*****

WILLAS reserves the right to make changes without notice to any product specification herein, to make corrections, modifications, enhancements or other changes. WILLAS or anyone on its behalf assumes no responsibility or liability for any errors or inaccuracies. Data sheet specifications and its information contained are intended to provide a product description only. "Typical" parameters which may be included on WILLAS data sheets and/ or specifications can and do vary in different applications and actual performance may vary over time. WILLAS does not assume any liability arising out of the application or use of any product or circuit.

This is the preliminary specification. WILLAS products are not designed, intended or authorized for use in medical, life-saving implant or other applications intended for life-sustaining or other related applications where a failure or malfunction of component or circuitry may directly or indirectly cause injury or threaten a life without expressed written approval of WILLAS. Customers using or selling WILLAS components for use in such applications do so at their own risk and shall agree to fully indemnify WILLAS Inc and its subsidiaries harmless against all claims, damages and expenditures.