LITE-ON SEMICONDUCTOR

L50ESDL5V0H4-2

ESD PROTECTION DEVICE

STAND-OFF VOLTAGE - 5.0 V
POWER DISSIPATION - 500 W

GENERAL DESCRIPTION

The L50ESDL5V0H4-2 has been specifically designed to protect sensitive components which are connected to data and transmission lines from over voltages caused by ESD (electrostatic discharge), FET (electrical fast transients), and lightning.

FEATURES

- Protects two I/O line.
- Max. peak pulse power : P_{PP} = 500W at tp = 8/20 us.
- Low capacitance: 7.4pF typical.
- Low clamping voltage.
- IEC 61000-4-2 (ESD), > ±30KV (air) ; > ±27KV (contact)
- IEC 61000-4-5 (Lightning), 25A (8/20μs)
- Qualified to ACE-Q101 Rev_C

APPLICATION

- USB power & data line protection.
- Ethernet 10baseT
- Video line protection
- T1/E1 secondary IC side protection.
- Portable electronics.
- WAN/LAN equipment.

MECHANICAL DATA

- Case material: “Green” molding compound UL flammability classification 94V-0 (No Br. Sb, Cl)
- Terminals: Lead Free Plating(Matte Tin Finish), solderable per J-STD-002 and JESD22-B
- Moisture sensitivity level 1 per J-STD-020C
- Component in accordance to RoHs 2011/65/EU

SOT-143

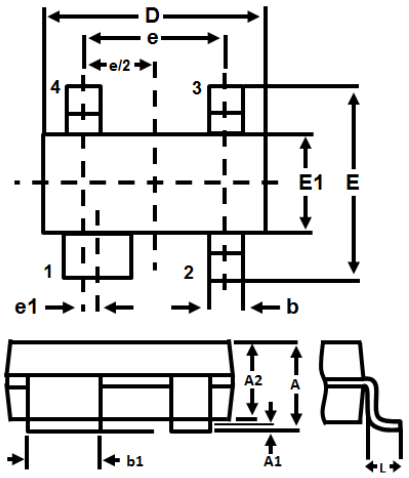

SOT-143		
DIM.	MIN	MAX.
A	0.80	1.22
A1	0.013	0.15
A2	0.75	1.07
b	0.30	0.51
b1	0.76	0.94
D	2.80	3.04
E	2.10	2.64
E1	1.20	1.40
e	1.92 BSC	
e1	0.20 BSC	
L	0.40	0.60
All Dimensions in millimeter		

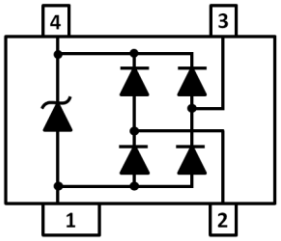

PIN ASSIGNMENT	
1	Ground
2,3	Input lines
4	V_{CC}

MAXIMUM RATINGS AND ELECTRICAL CHARACTERISTICS

Ratings at 25°C ambient temperature unless otherwise specified.

PARAMETER	SYMBOL	VALUE	UNIT
Peak pulse power (tp = 8/20 us)	P_{Pk}	500	W
Peak pulse current (tp = 8/20 us)	I_{pp}	25	A
Operating junction temperature range	T_J	-55 to +125	°C
Storage temperature range	T_{STG}	-55 to +150	°C
Soldering temperature t max = 10s	T_L	260	°C

ELECTRICAL CHARACTERISTICS

PARAMETER	SYMBOL	CONDITIONS	MIN	TYP	MAX	UNIT
Reverse stand-off voltage	V_{RWM}	----	--	--	5.0	V
Breakdown voltage	V_{BR}	I_R = 1 mA	6.0	--	--	V
Reverse leakage current	I_{RM}	V_{DRM} = 5 V	--	--	5	μA
Clamping voltage	V_C	I_{PP} = 1A, tp = 8/20 μs,	--	--	9.8	V
		I_{PP} = 25A, tp = 8/20 μs,	--	--	20	
Junction Capacitance	C_J	V_R = 0V, f =1MHz, Between I/O pins	--	3.5	5	pF
		V_R = 0V, f =1MHz, Any I/O pin to ground	--	7.4	10	

RATING AND CHARACTERISTIC CURVES
L50ESDL5V0H4-2

FIG.1- 8/20us pulse waveform according to IEC 61000-4-5

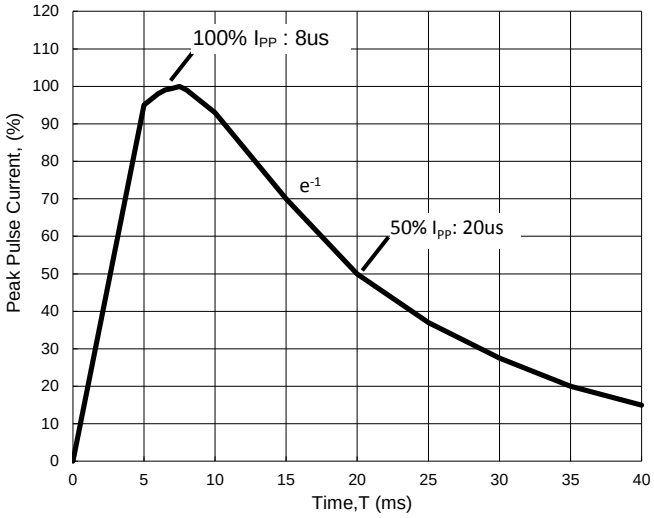

FIG.2- ESD pulse waveform according to IEC 61000-4-2

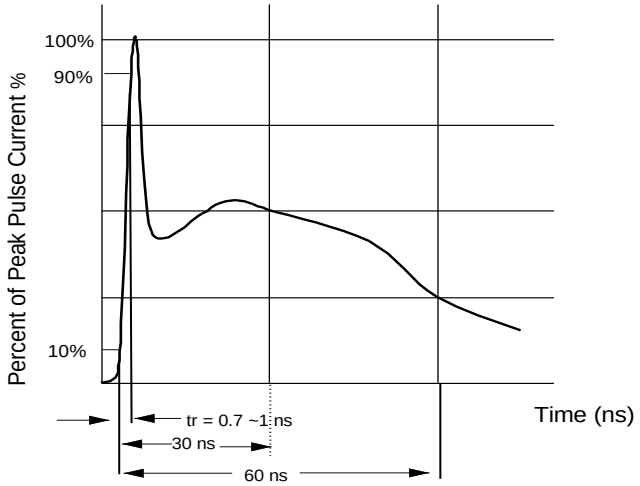

FIG3- power dissipation versus pulse time

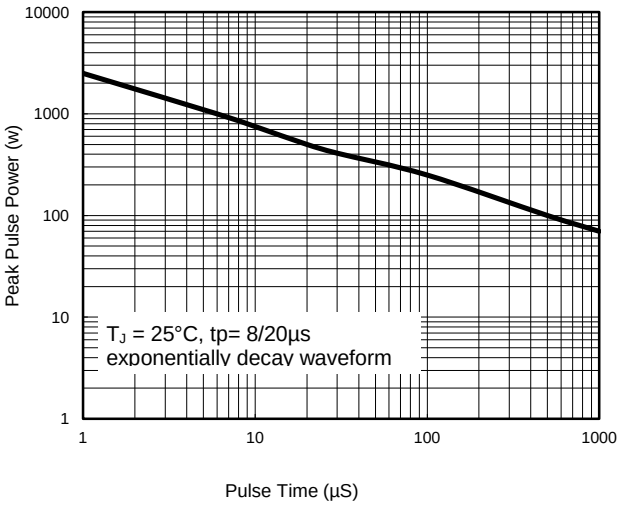

FIG4- peak pulse power versus T_J

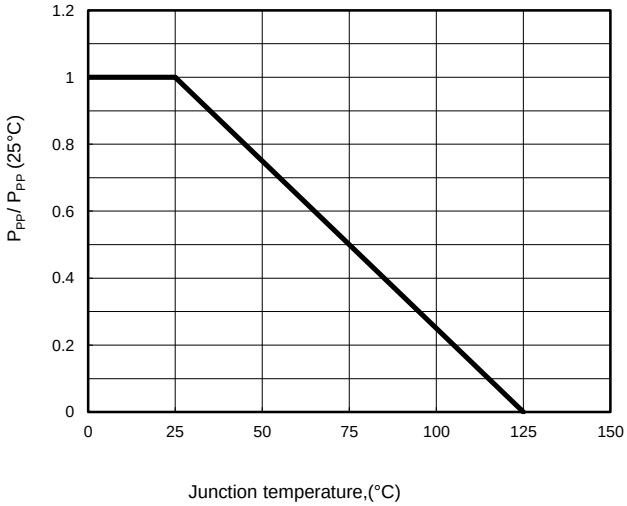

FIG.5- capacitance versus reverse voltage



FIG.6- reverse leakage current versus Tj

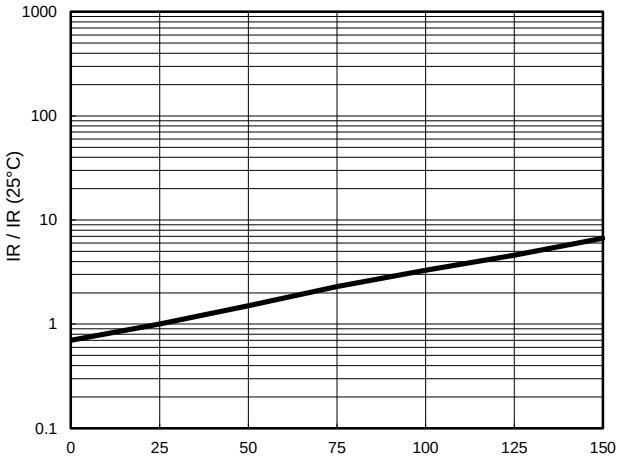

RATING AND CHARACTERISTIC CURVES
L50ESDL5V0H4-2

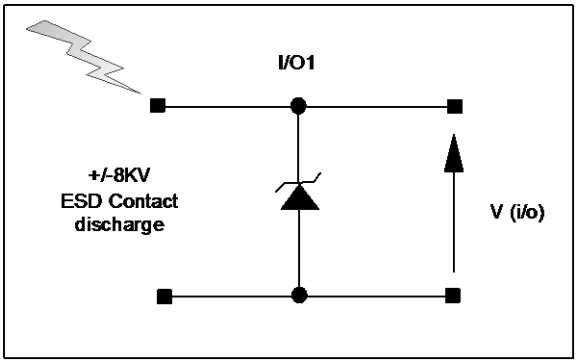

FIG.7- ESD Test Configuration

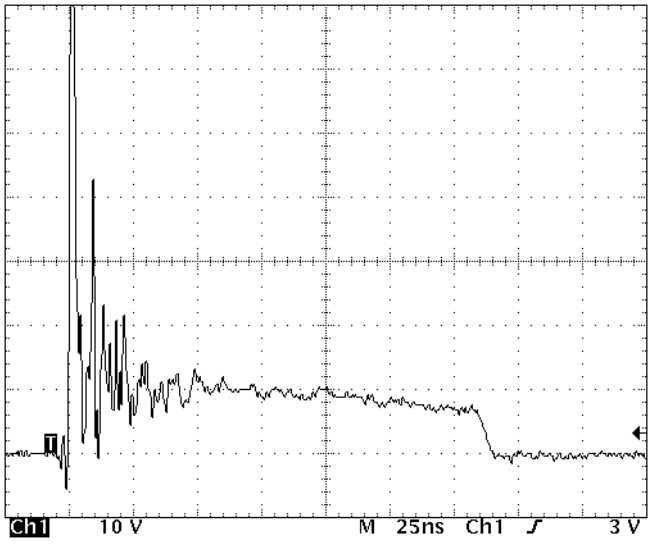

FIG.8- Clamped +8 kV ESD voltage waveform

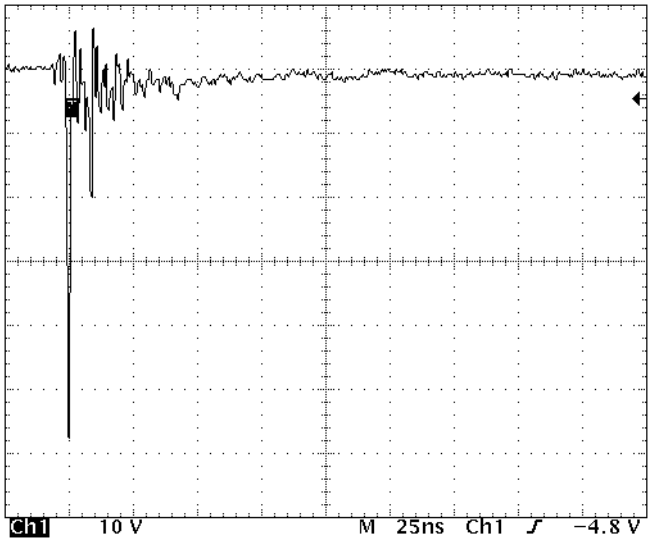

FIG.9- Clamped -8 kV ESD voltage waveform

MARKING AND PACKAGE INFORMATION
L50ESDL5V0H4-2

Marking & Orientation

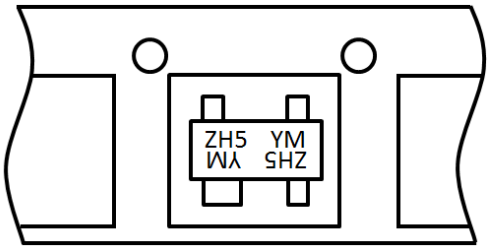

Packaging Information

DEVICE	Q'TY/REEL (PCS)	REEL DIA. (INCH)	Q'TY/BOX (PCS)	Q'TY/CARTON (PCS)
L50ESDL5V0H4-2	3000	7	45000	180K

SOT-143 Soldering Pad Layout

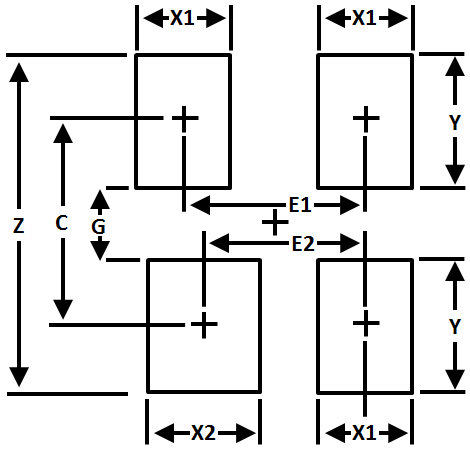

DIM.	MILLIMETERS	INCHES
C	(2.20)	(0.086)
E1	1.92	0.075
E2	1.72	0.067
G	0.80	0.031
X1	1.00	0.039
X2	1.20	0.047
Y	1.40	0.055
Z	3.60	0.141

Important Notice and Disclaimer

LSC reserves the right to make changes to this document and its products and specifications at any time without notice. Customers should obtain and confirm the latest product information and specifications before final design, purchase or use.

LSC makes no warranty, representation or guarantee regarding the suitability of its products for any particular purpose, nor does LSC assume any liability for application assistance or customer product design. LSC does not warrant or accept any liability with products which are purchased or used for any unintended or unauthorized application.

No license is granted by implication or otherwise under any intellectual property rights of LSC.

LSC products are not authorized for use as critical components in life support devices or systems without express written approval of LSC.